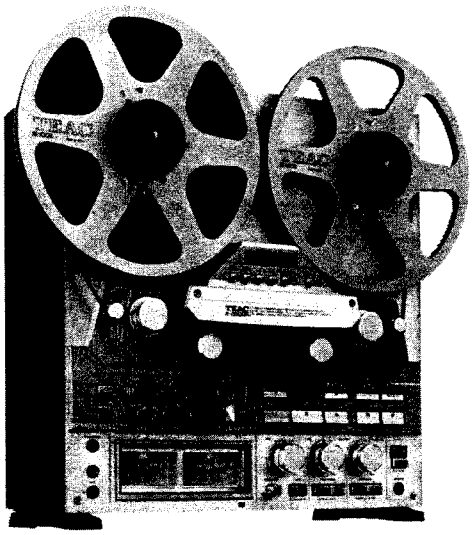

TEAC®

SERVICE MANUAL

X-2000R

Stereo Tape Deck

- dbx Noise Reduction system made under license from dbx, Incorporated. The name "dbx" and the dbx symbol are trademarks of dbx, Incorporated.

CAUTION

⚠ Parts marked with this sign are safety critical components. They must always be replaced with identical components—refer to the appropriate parts list and ensure exact replacement.

- dbxおよびdbxマークはdbxインコーポレーテッドの登録商標です.
- dbxシステムはdbxインコーポレーテッドの実施権に基づいて製造されています.

注 意

⚠印は安全重要部品です. 交換する時は必ずティアック指定の部品を使用してください.

Effective: June, 1984 A-40087

57040Z1000

1 SPECIFICATIONS AND SERVICE DATA

仕様とサービス・データ

Notes:
1. Improvements may result in changes in specifications and service data.
2. 0 dB is referenced to 0.775 V in this manual.

注.
1. 仕様およびサービス・データは改善のため，予告なく変更することがあります.
2. 本マニュアルの0dBは0.775Vを基準としています.

SPECIFICATIONS

Track System ¼-track, 2-channel stereo
Head System
6 heads: forward erase, reverse playback, reverse record, forward record, forward playback, reverse erase.
Reel Size 10-½ and 7"
Tape Speed 19cm/s (7-½ips) and 9.5cm/s (3-¾ ips)
Inputs (level and impedance)
MIC: Specified input level: −60dB (0.775mV)/10kohms
Min. input level: −70dB (245μV)
LINE IN: Specified input level: −12dB (195mV)/50kohms
Min. input level: −22dB (61.5mV)
Outputs (level and impedance)
OUTPUT: Specified output level: −5dB (436mV)/10kohms
Max. output level: +1dB (0.869V)
PHONES: Specified output level: −24dB (48.9mV)/8ohms
Playback equalization
"LH" tape: 19cm/s: 3,180μs + 50μs (NAB)
9.5cm/s: 3,180μs + 90μs (NAB)
"EE" tape: 19cm/s: 3,180μs + 35μs
9.5cm/s: 3,180μs + 50μs
Motors
Capstan motor: FG servo DC motor
Reel motor: 2 DC slotless motors
Bias Frequency 150kHz
Power Requirements
100/120/220/240V, AC 50/60Hz 90W (General export model)
220V AC 50Hz, 100W (Europe model)
240V AC 50Hz, 100W (U.K./Australia model)
120V AC 60Hz, 90W (U.S.A./Canada model)
100V AC 50/60Hz 90W (Japan model)
Weight 21.0kg (46-5/16 lbs) net
25kg (55-1/8 lbs) (with wooden case)

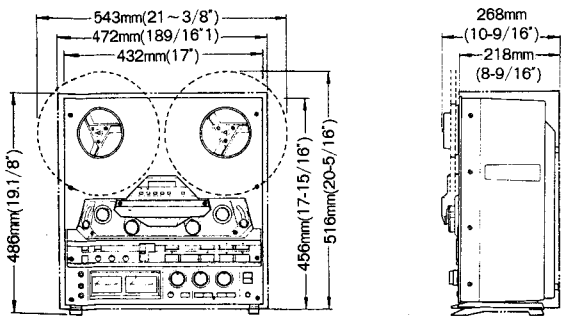

Broken line indicates General Export Models for Limited Areas.

Fig. 1-1 Dimensions

SERVICE DATA

MECHANICAL
Tape Speed Deviation 3,000Hz ±30Hz
Tape Speed Drift 15Hz
FWD/REV Tape Speed Differential 30Hz
Wow and Flutter
Playback: 0.05% (WRMS), 0.10% (RMS) at 19cm/s
0.07% (WRMS), 0.12% (RMS) at 9.5cm/s
Record/Playback: 0.12% (RMS) at 19cm/s
0.15% (RMS) at 9.5cm/s
Pinch Roller Pressure 1.35kg ～ 1.9kg (3.0 lbs ～ 4.2 lbs)
Tape Tension
Play mode: **Take-up:** 50g ±10g (1.4oz ～ 2.1oz)
Fast winding mode: **Take-up:** 110g ±10g (3.5oz ～ 4.2oz)
Brake Torque
Forward direction: 1.2 ～ 1.9kg-cm (17 ～ 26oz-inch)
Reverse direction: 0.7kg-cm (9.7oz-inch) or less
Fast Winding Time 100 seconds or less for 550m (1800 feet)
Pitch Control Standard tape speed ±6% or more
FWD/REV Change Time 3.5 sec. ±0.5 sec.
TIMER Activate Time 4 sec. ±2 sec.

ELECTRICAL

Frequency Response
See Fig. 3-5 to 3-10
Siganl to Noise Ratio
Playback: 53dB min. (19cm/s, NORMAL)
56dB min. (19cm/s, EE)
50dB min. (9.5cm/s, NORMAL)
53dB min. (9.5cm/s, EE)
Overall: 53dB min. (19cm/s, NORMAL)
56dB min. (19cm/s, EE)
51dB min. (9.5cm/s, NORMAL)
53dB min. (9.5cm/s, EE)
Overall (dbx): 65dB min. (Both speeds, various tapes)
Erase Efficiency 68dB min. at 1kHz (measured with input 10dB higher than the specified input level)
Channel Separation 50dB min. at 1kHz
Adjacent Track Crosstalk 40dB min. at 125Hz
Total Harmonic Distortion 0.8% or less (400Hz, 19cm/s, DBX both IN and OUT, various Tapes)

2 MECHANICAL ADJUSTMENTS AND CHECKS

機構部の調整と確認

2-1 ROTATING PART THRUST CLEARANCE CHECKS

Reference values

Capstan shaft:	0.1mm to 0.25mm (magnefloat type)
Inertia roller:	0.05mm to 0.3mm
Tension arm guide roller:	0.05mm to 0.3mm
Reel motor:	0 (spring type)
Tension arm:	0 (spring type)

NOTE: Since the capstan shaft is a magnefloat type, check that it is forced towards the rear of the deck while rotating.

2-2 CAPSTAN MOTOR REPLACEMENT

1. When the capstan motor is replaced, install it with its lead wires and washers as shown.
2. Check that, when the deck is operated by repeating the forward and reverse play modes, the capstan drive belt changes position on the flywheels smoothly.

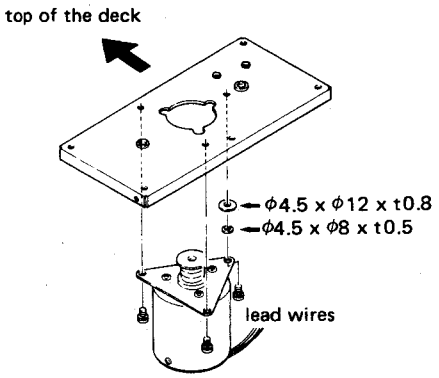

Fig. 2-1 Capstan motor replacement

2-3 BRAKE ADJUSTMENT

NOTE: The explanation and figure in this paragraph are for the left side brake, similar checks and adjustment are applicable for the right side one.

1. With brake applied (brake solenoid off), move brake band bracket in directions (A) so that brake arm comes in parallel with reel motor chassis.
2. Adjust the mounting position of brake solenoid in directions (D) so that when brake solenoid switches on and off the stroke of the solenoid plunger is about 2mm.
3. Adjust band ass'y retaining plate in directions (B), (C) and (E) so that brake felt does not touch brake drum when brake solenoid switches off.
4. Upon completion of adjustments, check that tape tension does not drop in any tape transport modes and there is not any tape winding troubles.

2-1 回転部のスラスト・クリアランス・チェック

以下は参考値(無調整)

キャプスタン・シャフト	：0.1～0.25mm(マグネフロート・タイプ)
ガイド・ローラ	：0.05～0.3mm
テンション・アーム・ガイド・ローラ	：0.05～0.3mm
リール・モータ	：0(スプリング・タイプ)
テンション・アーム	：0(スプリング・タイプ)

注．キャプスタン・シャフトはマグネフロートタイプの為，定常回転中はスラスト受け方向（デッキ後面方向）に押されている事を確認すること．

2-2 キャプスタン・モータの交換

1.キャプスタン・モータを交換する場合は,図2-1の矢印が示すワッシャの取付け位置に注意すること．

2.取付後FWD，REVを繰返したとき，キャプスタン・ベルトの走行位置がスムーズに切換ることを確認すること．

2-3 ブレーキ調整

1.ブレーキがかかった状態(ブレーキ・ソレノイドOFF)で,ブレーキ・アームとリール・モータ・シャーシのスキマが平行になるようブレーキ・バンド・ブラケット取付位置をA方向に調整する．

2.次に，ブレーキ・ソレノイドをON・OFFしたときのプランジャのストロークが約2mmになるように，ブレーキ・ソレノイドの取付け位置をD方向に調整する．

3.ブレーキ・ソレノイドON状態の時，ブレーキ・ドラムとブレーキ・フェルトとが接触しないように，ブレーキ・バンド受けの取付け位置をB,C,E方向に調整する．

4.調整後，すべてのテープ操作に於て，テンション落ち，テープ巻込み等が生じないことを確認する．

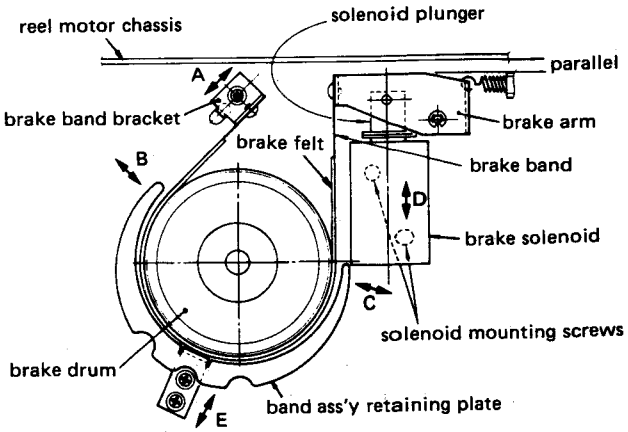

Fig. 2-2 Brake adjustment

2-4 BRAKE TORQUE MEASUREMENT

1. Place an empty 7" reel, connected to a spring scale by a string, on the reel table.
2. Pull the scale away from the reel and read the scale indication only when the reel table is steady motion.
3. Do steps 1 and 2 for each measuring condition, (A) through (D) in Fig. 2-3.
4. The values are as chart in Fig. 2-3.

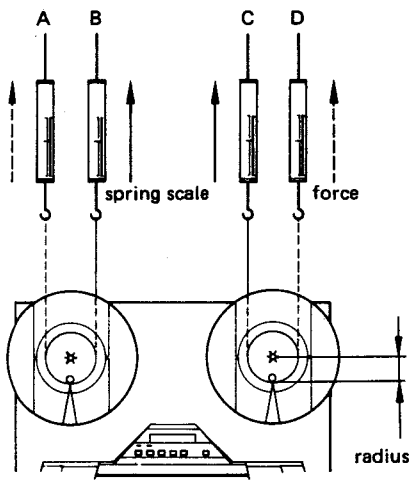

↑ Forward direction (B) (C)	1.2 to 1.9kg-cm (17 to 26oz-inch)
↑ Reverse direction (A) (D)	0.7kg-cm (9.7oz-inch) or less
Left/right deviation	0.2kg-cm (2.8oz-inch) or less

NOTES: 1. The reverse direction values are reference.
2. The specification of left/right deviation only applies for forward direction torques.

Torque calculating formulas:
(1) Torque (in g-cm or oz-inch)
= Force or Weight (in g or oz) x Radius (in cm or inch)
(2) Conversion of g-cm to oz-inch:
g-cm x 0.0139 = oz-inch

Fig. 2-3

2-5 PAUSE POSITION ADJUSTMENT

1. Place the deck in the pause mode.
2. Adjust by turning the pause positioning nut so that the clearance between the capstan shaft and the tape is 0.5mm to 1.0mm.
3. Of the two capstan shaft/pinch rollers, adjustment is allowable only for the side having the narrower clearance.
4. Check that, by repetition of play mode to pause mode and stop mode to pause mode, there is clearance at both sides.

2-4 ブレーキ・トルク測定

	正方向	負方向	左右差
右リール	1.2～1.9	0.7	0.2以下
左リール	1.2～1.9	0.7	

単位：kg・cm（トルクは参考値）

2-5 ピンチ・ローラ・ポーズ位置調整

デッキをポーズ状態にし，ポーズ位置調整ナットにより，キャプスタンとピンチローラ間のすき間を0.5～1.0mmに調整する．キャプスタンとピンチローラのすき間は，左右で差を生ずるが，調整はすき間の少ない側のみ行なう．調整後PLAY→PAUSE,STOP→PAUSEを何回か行ない，すき間を確認すること．

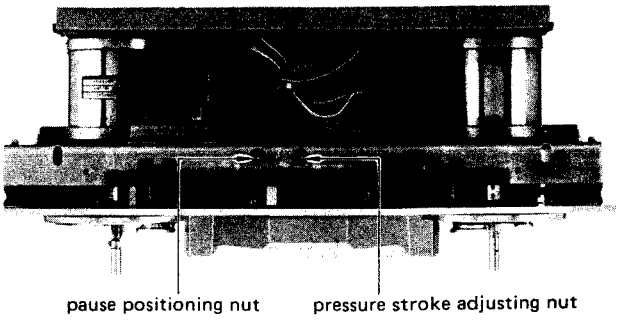

Fig. 2-4 Pause position and pinch roller pressure stroke adjustments

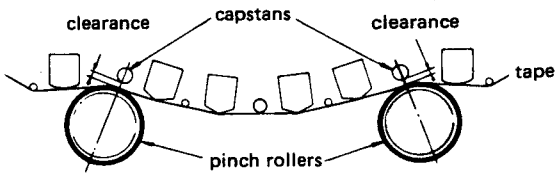

Fig. 2-5 Pause position adjustment

2-6 PINCH ROLLER PRESSURE STROKE ADJUSTMENT

1. Set the deck in the forward or reverse play mode.
2. Adjust by turning the pressure stroke adj. nut (Fig. 2-4) so that the clearance between the pin and the stopper cushion is about 1.0mm.
3. Since the clearance is produced at one side (left or right), adjustment for this side only is permissible.

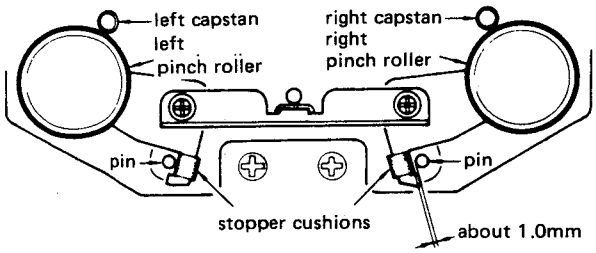

Either the left or right should have a clearance of about 1.0mm.
スキマ1mm程度（左右どちらか）

Fig. 2-6

2-7 PINCH ROLLER PRESSURE MEASUREMENT

NOTES: 1. The explanation below applies to both the left and right pinch rollers.
2. Both pinch roller pressures are automatically set with equal value.

1. Hold both the left and right tension arms in the upper positions using rubber bands, string etc.
2. Set the deck in either play mode with no tape loaded.
3. Attach the spring scale to the pinch roller as shown in the figure.
4. Draw the pinch roller away from the capstan shaft (in the direction of a line intersecting the centers of the capstan shaft and the pinch roller) until the capstan shaft and the pinch roller are separated.
5. Return the scale back until the pinch roller just begins to turn. The scale should then be reading as follow.
   Reference value: 1.35kg to 1.9kg (3.0 lbs to 4.2 lbs)
6. If the reading is out of specification, replace defective part(s). There are no adjustable parts.

2-6 ピンチローラ圧着ストローク調整

1. 調整時のデッキの作動モード……PLAY
2. 図2-4に示す圧着ストローク調整ナットにより，図2-6に示すようにピンとストッパー・クッションのすき間を約1mmに調整する(ピンとストッパー・クッションが離れていて，すき間が確認出来れば良い).
3. このすき間は，圧着スプリングのバラツキにより，左右いずれか一方にしか出来ないが，すき間の出来た側のみ調整すれば良い.

2-7 ピンチローラ圧着力測定

圧着力：1.35～1.9kg（戻し法）

注．左右ピンチローラ圧着力は自動的にセットされ，また無調整方式なので上記規格を満足しない場合は部品交換が必要です.

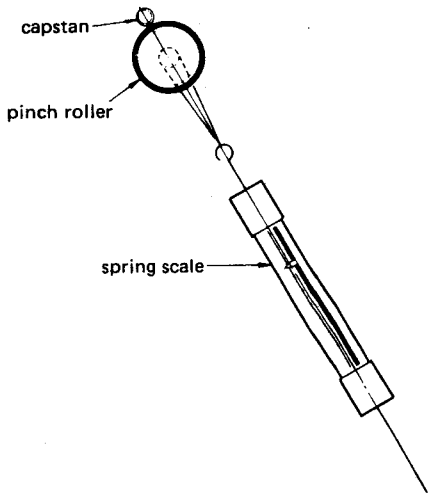

Fig. 2-7

2-8 TAPE TENSION ADJUSTMENT

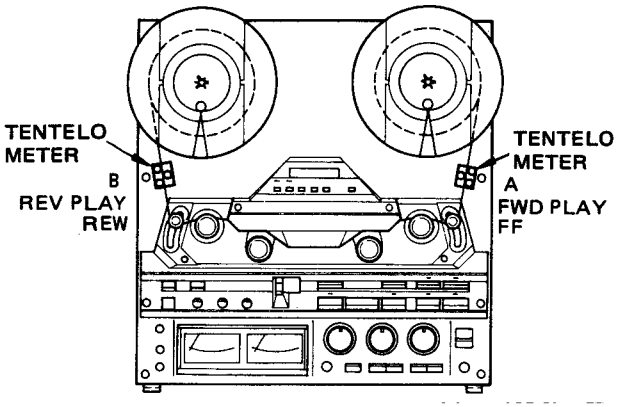

Fig. 2-8 Tape tension measuring points

2-8 テープ・テンション調整

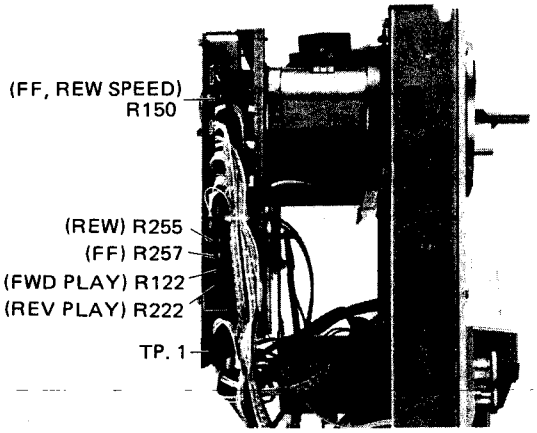

Fig. 2-9 Tape tension adjuster location

NOTES

1. Since these settings are precisely factory adjusted, in general, they should not be re-adjusted. If it is specifically required, a special meter is needed.
   Tentelo meter: Model T2-H20-1 or T2-H15-UM.
2. To facilitate adjustment, the deck should be placed in a vertical position.
3. For the reels mounted on both left and right reel tables, use the same size ones.
4. Before all the following adjustments (2-8-1 ~ 2-8-4), perform next instructions in order to activate the relevant circuit.
   a. Thread the tape to lift up both tension/shut-off arms.
   b. Set the POWER switch to ON.
   c. Leave the deck as it is for 5 to 10 minutes.

注意

1. テープ・テンションの測定には次のテンション・メータが必要です.
   テンテロ・メータ（米国，テンテル社製）
   モデル　T2-H20-1又はT2-H15-UM
2. 測定及び調整は，デッキを垂直位置にして行なってください.
3. 左右同サイズのリールを使用してください.
4. デッキの電源オン後5～10分以上経過してから測定・調整を行なってください.

2-8-1 IN FORWARD PLAY

1. Place a reel loading TEAC YTT-8013 test tape on the left reel table and an empty reel on the right reel table, then thread the tape.
2. Let the tape run in fast forward mode until both reels have nearly the same tape winding diameter.
3. During forward play with a tape speed of 3-3/4ips (9.5cm/s), measure tape tension at point A.
4. Adjust R122 so that the specified tape tension of 50g ± 10g (1.4oz ~2.1oz) is obtained.
   (Obtain a 50g or 1.8oz value as far as possible).

2-8-1 FWD PLAYテンション調整

1. テープ(7号リール，10号リールどちらでもよい)をかけ，左右同程度の巻径にする.
2. テープをLOW SPEED(9.5cm/sec)，FWD PLAYモードで走行させる.
3. Aの位置にテンテロ・メータを当て，R122をまわしてテンションを50g±10g(できるだけ50gに近い値)に調整する.

2-8-2 IN REVERSE PLAY

(Continued from step 4 above)

5. Let both reels have the same amount of tape wounded on them.
6. During reverse play with a tape speed of 3-3/4ips, adjust R222 to get a specified tape tension of 50g ± 10g (1.4oz ~ 2.1oz) at point B.(Obtain a 50g or 1.8oz value as far as possible).

2-8-2 REV PLAYテンション調整

1. 前記1と同じ手順でテープをかけ，LOW SPEED REV PLAYモードでテープを走行させる.
2. Bの位置にテンテロ・メータを当て，R222をまわしてテンションを50g±10g(できるだけ50gに近い値)に調整する.

2-8-3 IN FAST FORWARD

1. Load a TEAC YTT-8013 test tape on the left reel table and an empty reel on the right reel table, then thread the tape.
2. Stop the left reel by hand and set the deck in fast forward mode.
3. Adjust R257 to obtain a 100g to 120g (3.5oz ~4.2oz) value at point A (Obtain a 110g or 3.9 oz value as far as possible).

REMARK: Back tension in fast forward (or fast rewind) is automatically set when tape speed is adjusted as in paragraph 2-12-2.

2-8-4 IN REWIND

1. Load a TEAC YTT-8013 test tape on the right reel table and the empty reel on the left reel table, then thread the tape.
2. Stop the right reel by hand and set the deck in the rewind mode.
3. Adjust R255 to obtain a 100g to 120g (3.5oz ~4.2oz) value at point B (Obtain a 100g or 3.9oz as far as possible).

2-9 TENSION ARM HEIGHT ADJUSTMENT

1. Thread any standard tape on the deck using a standard empty reels such as TEAC RE-1002.
2. Set the deck in the forward or reverse play mode.
3. Stop left (right) inertia roller's rotation by hand.
   Adjust by turning the left (right) tension arm height adjusting nut (refer to Fig. 2-10) so that the tape moves in the center of the inertia roller.
   NOTE: When adjusting, pay special attention to the relationship between position-detecting shutter and the opening of photo-interrupter to prevent, for example, the shutter from being caught.
4. Release the inertia roller. Fine-adjust the adjusting nut again until there is no tape curling on the tape guide pin between the erase head and the left (right) inertia roller.
5. After Adjusting the height of both left and right tension arms, check that the tape running condition is good by switching between fast forward and rewind modes.
6. If the tape running position is different when the inertia roller stops and when it turns, the conditon when the inertia roller is rotating has priority.

2-8-3 FFテンション調整

1. サプライ側のリール(左リール)を固定してFFモードにする(テープを走行させない状態に保つ).
2. Aの位置にテンテロ・メータを当て,R257をまわしてテンションを110g±10g(できるだけ110gに近い値)に調整する.

参考：FF(REW)時のサプライ側テープ・テンション(バック・テンション)は,2-12-2項に述べるFF REW)テープ・スピード調整により自動的にセットされます.

2-8-4 REWテンション調整

1. サプライ側のリール(右リール)を固定してREWモードにする(テープを走行させない状態に保つ).
2. Bの位置にテンテロ・メータを当て,R255をまわしてテンションを110g±10g(できるだけ110gに近い値)に調整する.

注：FFとREWのテンションはできるかぎり等しくする.

2-9 テンションアーム高さ調整

1. デッキのモード：FWD PLAY又はREV PLAY.
2. 調整しようとする側のガイドローラの回転を手で停め，ガイドローラのセンターをテープが走行するようにテンションアーム高さ調整ナット(図2-10参照)を調整する.
3. 手で停止させたガイドローラを放し，ガイドローラと消去ヘッドの間のテープガイドピンの所でテープがカールしないように再度テンションアーム高さ調整ナットを微調整する.
4. 左右のテンションアーム高さ調整後，FF, REWの繰返し動作を行ってテープ走行状態を見る.

注：ガイドローラを停止させた時と回転させた時とでテープ走行位置が変化する場合はガイドローラ回転中のテープ走行を優先する.

Figure shows left side tension arm.
図は左側テンション・アームを示す.

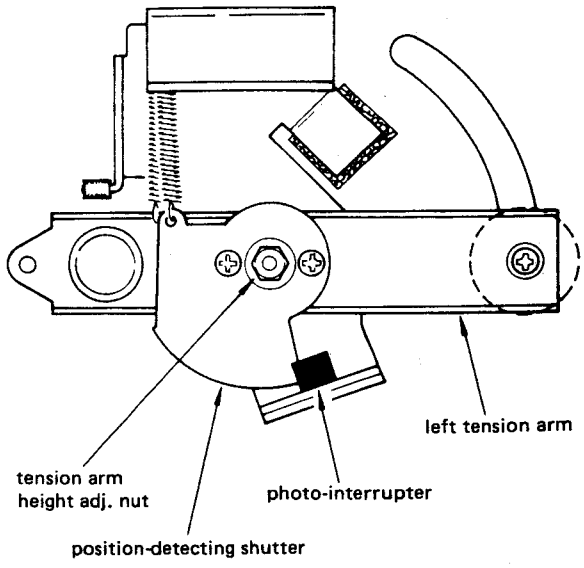

Fig. 2-10

2-10 REEL TABLE HEIGHT ADJUSTMENT

1. Adjust the tension arm height beforehand (See 2-9).
2. Check each reel table height using a TEAC RE-1002 empty reel and letting the tape run in each tape operating mode.
3. If the tape rubs against the reel flanges, adjust the reel table height by means of the two reel table mounting screws.

2-10 リール台高さ調整

1. 前項のテンション・アーム高さ調整後に本調整を行ってください.
2. TEAC RE-1002リールを使用し，各テープ動作でテープがリール・フランジに接触するかどうかをチェックする.
3. もし接触する場合はリール台を固定している2本のネジをゆるめ，リール台取付位置を動かして調整する.

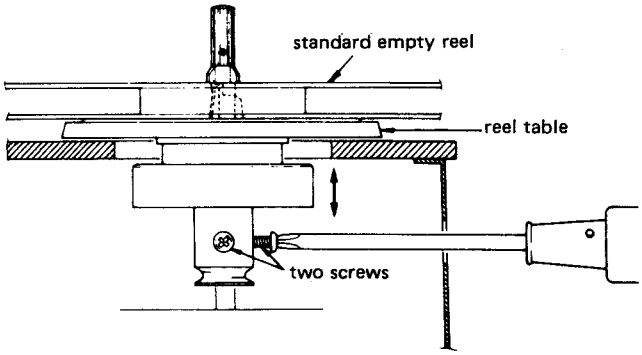

Fig. 2-11

2-11 TAPE PATH ALIGNMENTS

The following procedure is for parallelism adjustment of left pinch roller. A similar procedure is also applied for the right pinch roller.

2-11-1 COARSE ADJUSTMENT OF PINCH ROLLER PARALLELISM

1. Let pinch roller draw near toward capstan shaft by manually lifting up tape lifter shown in Fig. 2-12.
2. Check pinch roller/capstan shaft parallelism viewed from direction of arrow A shown in Fig. 2-12. (Refer to Fig. 2-13, 14.)
3. If not parallel, loosen the reinforcement plate screw near the correction-required side (Refer to Fig. 2-15), then correct tilt of pinch roller spindle using correction jig. (Part No. 573600010). Adjustment can be done by tilting correction jig in direction of arrow A or A'.
   NOTE:
   (1) Use the jig as near as possible to the pinch roller spindle.
   (2) Do not touch the surface of spindle.
   (3) Use no other tool for this adjustment!.
4. Remove pinch roller, then push up tape lifter to visually align pinch roller spindle with the capstan shaft viewed from direction of arrow B in Fig. 2-12.
5. If needed, adjust by tilting correction jig in direction of arrow B or B' in Fig. 2-15.

2-11-2 FINE ADJUSTMENT OF PINCH ROLLER PARALLEL ALIGNMENT

1. Repeat fast winding and rewinding and confirm tape travel positioning does not vary.
2. If necessary, adjust pinch roller alignment as shown in Fig. 2-15.

2-11 テープ走行調整

ピンチ・ローラとキャプスタン・シャフトとの平行度は，テープ走行の安定に最も重要な事項です.
以下に左ピンチ・ローラの平行度調整の手順を述べますが，右ピンチ・ローラについても同様に調整して下さい.

2-11-1 ピンチ・ローラ平行度の仮調整

1. 図2-12に示すテープ・リフタを手で押し上げ，ピンチ・ローラをキャプスタン・シフトに近づける.
2. 図2-12に示すA方向から見て，ピンチ・ローラとキャプスタン・シャフトの平行度をチェックする.
3. 平行でない場合は，調整棒を使用して図2-15に示す，A又はA'方向にピンチ・ローラ軸の傾きを修正する.（調整棒は出来るだけピンチ・ローラ軸に近い位置にセットして下さい）.（調整棒 品番5736000100）
4. 次にピンチ・ローラを外し，テープ・リフタを上げ，図2-12のB方向から見てピンチ・ローラとキャプスタン・シャフトの平行度をチェックする.
   平行でない場合は，調整棒を使用して図2-15に示すB又はB'方向にピンチ・ローラ軸の傾きを修正する.

2-11-2 ピンチ・ローラ平行度微調整

1. FWD, REVを繰返しテープ走行位置が変化しないことを確認する.
2. もし変化する場合は図2-15の方法でピンチ・ローラ軸の傾きを微調整する.

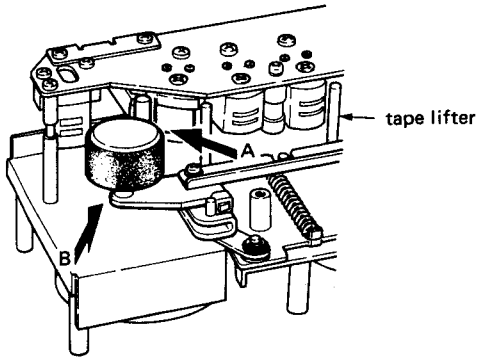

Fig. 2-12 Directions for pinch roller parallelism check

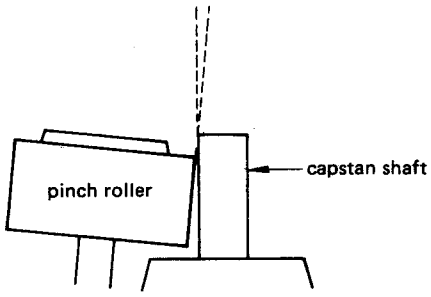

Fig. 2-13 View in direction A (example of non-parallelism)

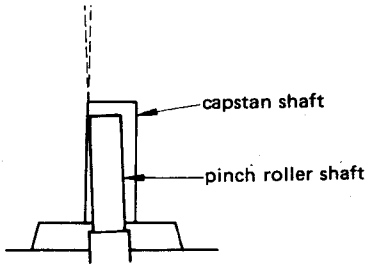

Fig. 2-14 View in direction B (example of non-parallelism)

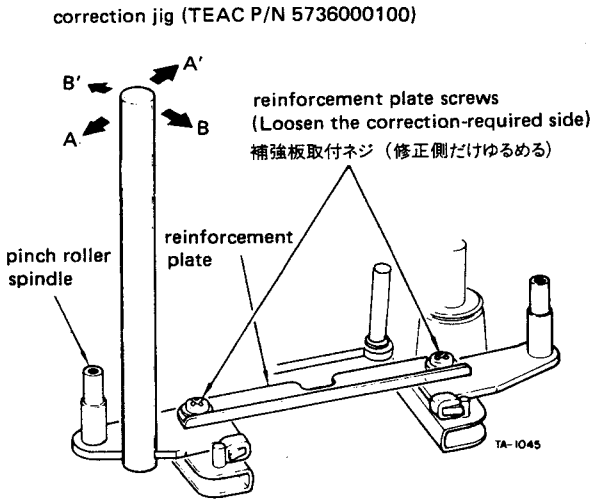

Fig. 2-15 Pinch roller/capstan alignment

2-12 TAPE SPEED ADJUSTMENT

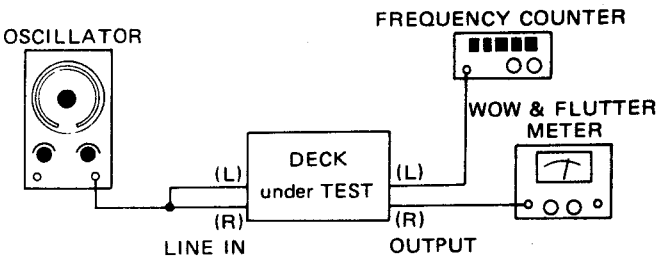

Fig. 2-16

NOTES: 1. Conduct all the following in both forward and reverse play modes.
2. When ordering test tapes, allow for the longer delivery time that is required for them.

2-12-1 PLAY SPEED

1. Connect a frequency counter to either OUTPUT terminal.
2. Load TEAC YTT-2003 test tape. Set the SPEED switch—HIGH, and PITCH CONT knob—OFF.
3. Play the tape. Adjust HIGH SPEED control (see Fig. 2-17) for a reading of 3,000Hz ±5Hz.
4. Check the following at the beginning and the end of the tape.
   Specifications:
   Tape speed deviation . . . . . 3,000Hz ±30Hz
   Tape speed drift 15Hz
   FWD/REV tape speed differential 30Hz
5. Change the test tape to a TEAC YTT-2002, and SPEED switch setting to LOW.
6. Repeat steps 3 through 4. Adjust LOW SPEED control if necessary.
7. Pull the PITCH CONT knob out. Set SPEED switch HIGH. Play a YTT-2003 tape.
8. Check if the speed variation of at least 3,000Hz ±180Hz is obtained when the PITCH CONT knob is rotated fully in both directions.
9. Change the test tape to YTT-2002, SPEED switch setting to LOW. Repeat step 8.

FAST WINDING SPEED

1. Set the deck in vertical position.
2. Connect oscilloscope between TP1 test point on the POWER PCB and ground.
3. Thread a TEAC YTT-8013 test tape. In this case, either use of 7inch reels or 10inch are permitted provided both left and right reels are tha same size.
4. During fast forward or rewind mode, adjust R150(see Fig. 2-9) so that wavelength displayed on the oscilloscope becomes 7msec. (Fig. 2-18). Adjustment should be satisfied at any tape winding position.
5. Check that almost equal value of fast winding speed is obtained between fast forward and rewind modes.

2-12 テープ・スピード調整

2-12-1 FWD/REV PLAYスピード

1. 調整個所　図2-17参照
2. テープ・スピード調整時，ピッチ・コントロール・スイッチはOFFにしておくこと．
3. 規格
   テープ速度偏差　3,000Hz±30Hz
   テープ速度変動幅　15Hz以内（無調整参考値）
   FWD/REV速度差　30Hz以内（無調整参考値）

2-12-2 FF/REWスピード

1. パワー基板のTP. 1(図2-9参照) にオシロスコープを接続する．
2. デッキをFFモード又はREWモードにする．
3. TP. 1の波形の波長が7m secになるようにR150(図2-9参照)を調整する……図2-18
4. FFとREWで大きな差がないことを確認する．

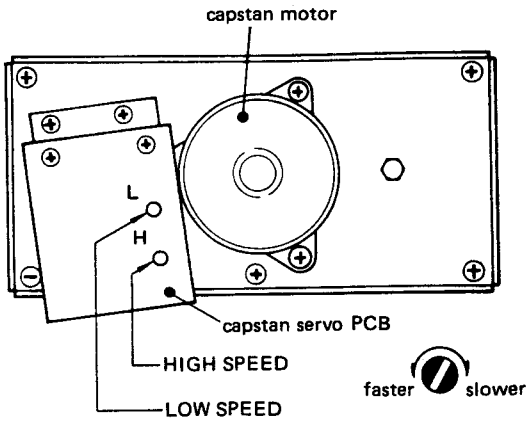

Fig. 2-17 FWD/REV play speed adjustment points

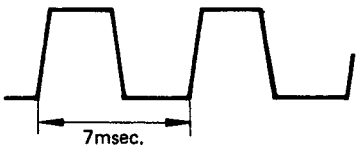

Fig. 2-18 Waveform at TP1

2-13 WOW AND FLUTTER CHECKS

NOTES: 1. All the following apply to both forward and reverse play modes.
2. The following measurements should be made at the begining and the end of the tape.
3. When ordering test tapes, allow for the longer delivery time that is required for them.

Playback

1. Connect the test equipment to the deck as shown in Fig. 2-16.
2. Load and play a TEAC YTT-2003 test tape for HIGH speed (19cm/s or 7-½ips), or a TEAC YTT-2002 test tape for LOW speed (9.5cm/s or 3-¾ips).
3. Read the indication on the wow and flutter meter.
   Specifications:
   HIGH speed: 0.05% WRMS
   0.10% RMS
   LOW speed: 0.07% WRMS
   0.12% RMS

Overall

4. Load a TEAC YTT-8013 test tape (blank). Apply and record a 3,000Hz signal.
5. During simultaneous tape monitoring (playing) the recorded signal, read the wow and flutter meter dispaly.
   Specifications:
   HIGH speed: 0.12% RMS
   LOW speed: 0.15% RMS

2-14 LUBRICATION

Oiling is needed after every 1,000 hours of operation or once a year if the deck is infrequently used. For this purpose, TEAC spindle oil (from TEAC TZ-255 oil kit), Mobil D.T.E. Oil Light, etc. are recommended. Lubrication is normally not necessary except at the points shown.

1. Place the deck in the horizontal position.
2. Apply a few drops of oil to the respective spindles shown, excluding capstans, then spread the oil evenly on the spindle surfaces using a cotton cloth, etc.
3. For capstans, apply a few drops to the indicated position.
4. After oiling all the points, leave the deck for 1 to 2 hours until the oil is thoroughly absorbed.

2-15 VOLTAGE CONVERSION (FOR GENERAL EXPORT MODELS)

Frequency Conversion

Since the X-Series uses DC motors, frequency conversion is not necessary.

Voltage Conversion

1. First remove the two feet by removing the screws in each one.
2. Unscrew the left and right sides of the cabinet.
3. Locate the voltage selector as seen from the top side of the deck.
4. Turn the slotted center post of the selector with a screwdriver to match the numerals corresponding to the voltage requirement of your area to the point marked "SET UP VOLTAGE" (click sound is heard).
5. Replace the cabinet and feet.

2-13 ワウ・フラッタ・チェック

使用テープ　YTT-2002……LOW (9.5cm/sec)
YTT-2003……HIGH (19cm/sec)

7号リール使用時の巻始め及び巻終りを測定.

	再生法		録再法
テープ速度	RMS	WRMS	RMS
19cm/s	0.10%	0.05%	0.12%
9.5cm/s	0.12%	0.07%	0.15%

2-14 注油

デッキの回転部分には1000時間使用毎或いは1年に1回程度注油が必要です.

オイルは, TEACスピンドル・オイル(TEAC TZ-255オイル・キット)又はMobil D.T.E.オイル・ライト等を使用してください.

1. デッキを水平位置に置く.
2. テンション・ローラ,ガイド・ローラ,ピンチ・ローラには数滴, キャプスタンには一滴, それぞれ図2-19に矢印で示す個所に注油する.
3. 注油は多過ぎないよう, またテープ走行部分にオイルが付着しないよう注意してください.

Figure shows left side. Do also for right side.

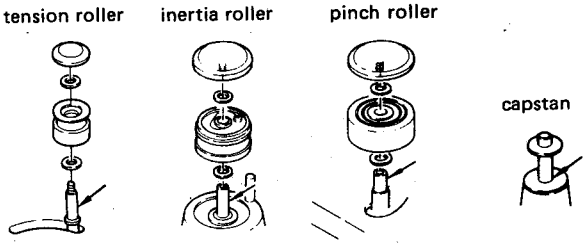

Fig. 2-19

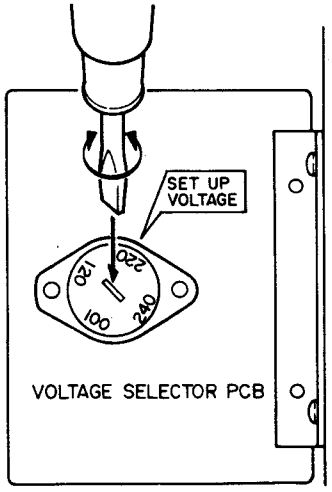

Fig. 2-20

2-16 HEAD ALIGNMENT

There is no need for head height and tilt adjustments because the record and playback heads of X-2000R are a semi-fixed type (erase head fully-fixed).

2-16-1 HEAD MOUNTING (RECORD AND PLAYBACK HEADS)

1. Refer to Fig. 2-22.
2. With head mounting screws, mount heads to head mounting plate. Attach shield case to the playback head.
3. Mount head ass'y to head base using mounting screw and mount tangency adjustment screw.
4. Mount azimuth adjustment screws.

2-16-2 PLAYBACK HEAD ADJUSTMENT

1. See Fig. 2-23 for necessary connections.
2. Set the MONITOR switch to TAPE.
3. Run the test tape TEAC YTT-1003 in forward play mode to reproduce the 400Hz signal on the tape.
4. Slightly loosen the mounting screws which hold forward playback heads in place and adjust the tangency using adjustment screws, for maximum output. When the maximum output is attained, retighten both mounting screws.
5. Play the 16kHz signal on the tape and adjust the azimuth of the playback heads using adjustment screws for less than 45° of phase difference between the two channels (see Fig. 2-25).

   NOTE: Azimuth adjustment should be completed by turning adjustment screws in tightening direction (clockwise).
6. Run the tape in reverse playback mode and perform the same tangency and azimuth adjustment procedures to reverse playback heads.

2-16-3 RECORD HEAD ADJUSTMENT

Proceed to record head adjustment only after playback head adjustment has been completed.

1. See Fig. 2-23 for necessary connections.
2. Set the MONITOR switch to TAPE.
3. Load the blank test tape TEAC YTT-8013 (NORMAL) or YTT-8053 (EE) and record a 400Hz, −12dB (195mV) signal in forward recording mode to reproduce it simultaneously.
4. Adjust the tangency of the forward recording head as in step 4 under paragraph 2-16-2.
5. Simultaneously record and reproduce a 400Hz, −42dB (6.15 mV) signal and adjust the azimuth of the forward recording head using adjustment screws for less than 45° of phase difference between the two channels (see Fig. 2-25).

   NOTES:
   - Azimuth adjustment should be completed by turning adjustment screws in tightening direction (clockwise).
   - Be carefull not to confuse the bias signal (150kHz) in measurement.
6. Place the deck in reverse recording mode and perform the same tangency and azimuth adjustment procedures to the reverse recording head.

2-16 ヘッド調整

X-2000Rの録音ヘッドと再生ヘッドは準固定式（消去ヘッドは完全固定式）になっています．このためヘッドの高さ調整とチルト調整は不要です．

2-16-1 ヘッド取付（録音ヘッド，再生ヘッド）

1. Fig.2-22参照
2. ヘッド取付ネジでヘッドをヘッド取付板に固定する（ヘッドAss'y）．このとき再生ヘッドにはシールド・ケースをセットする．
3. ヘッドAss'yをヘッド固定ネジとヘッド首振りネジでヘッド・ベースに取付ける．
4. アジマス調整ネジを取付ける．

2-16-2 再生ヘッド調整

1. 接続　Fig.2-23
2. MONITORスイッチTAPE
3. TEAC YTT-1003テープ・テストをFWD PLAYモードで走行させ，400Hz区分を再生する．
4. FWD再生ヘッドのヘッド固定ネジをやや緩め，ヘッド首振りネジを左右に動かして400Hz再生出力が最大になるようヘッドの首振り角度を調整する．調整終了後両ネジを締める．
5. 次にYTT-1003の16kHz区分を再生し，LchとRchの位相差が45°以内になるようアジマス調整ネジを調整する．
   (Fig. 2-24)
   注．アジマス調整ネジは締める方向（右回し）で調整を終ること．
6. 次にテープをREV PLAYで走行させ，上記と同様の手順でREV再生ヘッドのヘッド首振りとアジマスの調整を行なう．

2-16-3 録音ヘッド調整

録音ヘッド調整の前に再生ヘッド調整が終っていること．

1. 接続　Fig.2-23
2. MONITORスイッチ　TAPE
3. TEAC YTT-8013(NORMAL)又はYTT-8053(EE)テープをセットし，400Hz/−12dB(195mV)信号をFWD録音しながら同時再生する．
4. 再生ヘッド調整と同様にFWD録音ヘッドの首振り角度を調整する．
5. 次に10kHz/−42dB(6.15mV)信号を録音再生し，LchとRchの位相差が45°以内になるようアジマス調整する．
   (Fig.2-24)．
   注．・アジマス調整ネジは締める方向（右回し）で調整を終ること．
   ・バイアス信号（150kHz）を測定しないよう注意すること．
6. 次にデッキをREV録音状態にし，上記と同様の手順でREV録音ヘッドの首振りとアジマス調整を行なう．

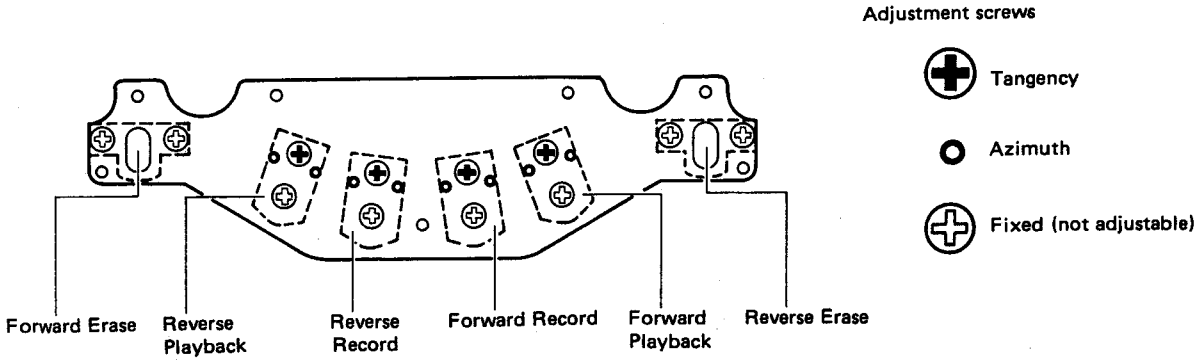

Fig. 2-21 Head arrangement

＊X-2000Rでは無調整

***TILT** あおり **The head surface should be parallel to the tape guide pin surface.** ヘッド表面がテープ・ガイドの表面に平行であること.	
AZIMUTH アジマス **The gap of the head core should be perpendicular to the tape travel.** ヘッド・コアのギャップがテープ走行方向に対して垂直であること.	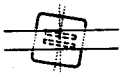
***HEIGHT** 高さ **The upper (lower) core of the head should be level with the upper (lower) edge of the tape.** コア上縁（下縁）がテープの上縁（下縁）ヘッドに一致していること.	
TANGENCY 首振り **The dotted line should be perpendicular to the surface of the tape.** ヘッドの中心線（点線）がテープに垂直であること.	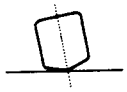

Fig. 2-22 Head regulation elements

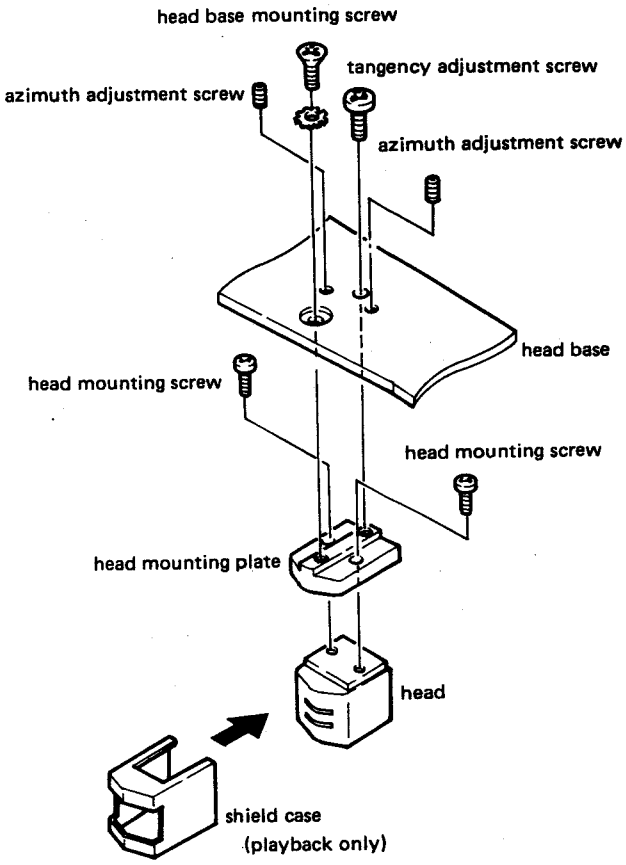

Fig. 2-23 Head mounting

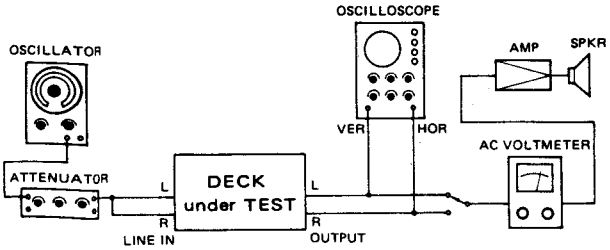

Fig. 2-24 Connection for phase check

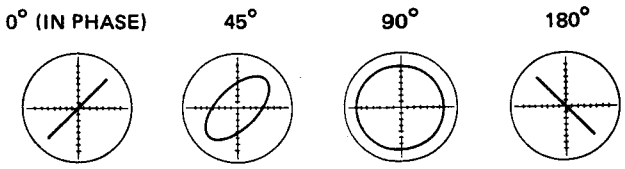

Fig. 2-25 Confirming phase relationship

3 ELECTRICAL ADJUSTMENTS AND CHECKS

アンプ部の調整と確認

3-1 ADJUSTMENT POINTS LOCATION AND CONNECTION

調整個所と接続

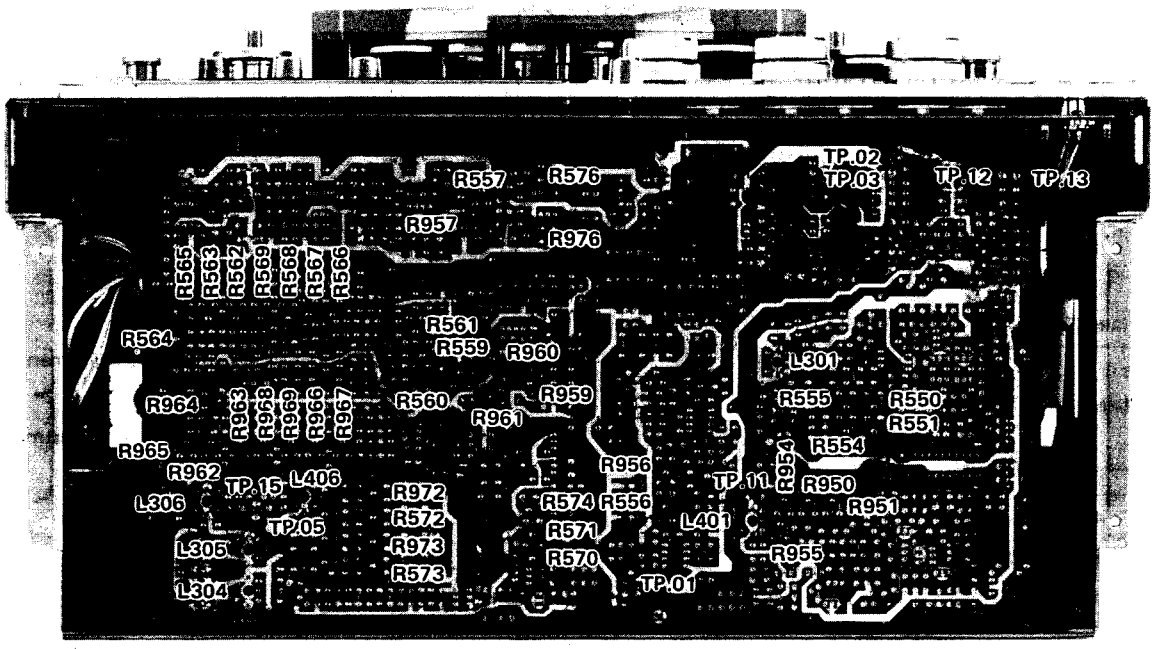

R550/R950	FWD	Playback EQ		R566/R966	FWD	NORMAL	19cm/s, Rec EQ
R551/R951	REV			R567/R967	REV		
R554/R954	FWD	Playback level		R568/R968	FWD	EE	
R555/R955	REV			R569/R969	REV		
R556/R956	Output level			R570	EE		9.5cm/s, Rec bias
R557/R957	Input level			R571	NORMAL		
R559/R959	FWD	EE	Rec level	R572/R972	FWD	EE	19cm/s, Rec bias
R560/R960	REV			R573/R973	REV		
R561/R961	NORMAL			R574	NORMAL		
R562/R962	FWD	NORMAL	9.5cm/s, Rec EQ	R576/R976	Phase shift		
R563/R963	REV			R596/R996	(Fixed resistor), EE, 19cm/s, Rec EQ sub.		
R564/R964	FWD	EE		L301/L401	Bias trap (playback)		
R565/R965	REV			L304	FWD	Monaural rec EQ	
				L305	REV		
				L306/L406	Bias trap (record)		

Fig. 3-1 REC AND PLAYPCB adjustment and test points

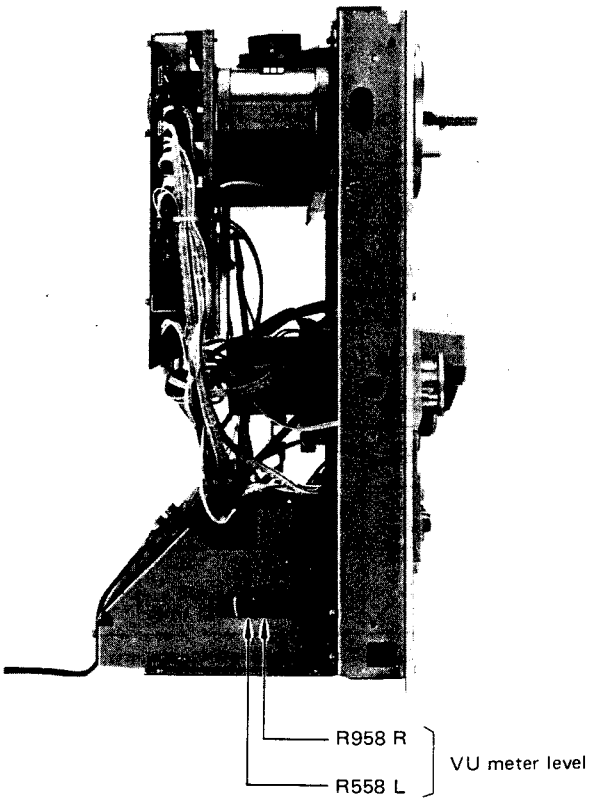

Fig. 3-2 Headphone PCB adjustment points

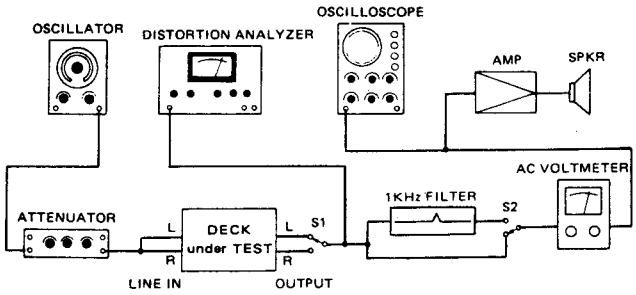

Fig. 3-3 Basic connection

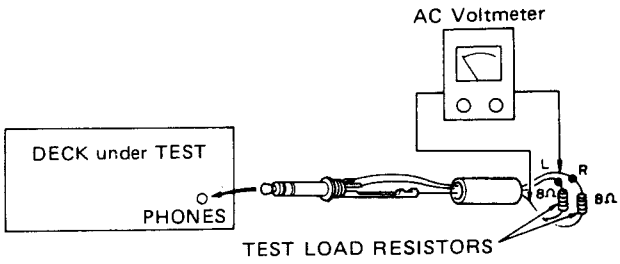

Fig. 3-4 Connection for PHONES level check

NOTES:

1. Before performing adjustments and checks , clean and demagnetize the entire tape path.
2. Check that the deck is properly set for the voltage in your locality.
3. In general, adjustments and checks are done in the order of L-ch then R-ch. Double REF. Nos. indicate L-ch/R-ch. (Example: R371/R372)
4. The value of "dB" refers to 0dB (0.775V). If an AC voltmeter calibrated to 0dB (1V) is to be used, appropriate compensation should be made.
5. The AC voltmeter used in the procedures must have an input impedance of 1M-ohms or more.

注意.

1. アンプ部の調整・確認の前に，テープ走行系の消磁と清掃を行なってください.
2. 特に指定の無い限り，調整はLch, Rchの順序で行なって下さい.
   尚R371/R372のように記されている回路番号はLch/Rchを示します.
3. 0dB＝0.775V
4. 測定に使用するレベル計の入力インピーダンスは1MΩ以上ものを使用してください.

3-2 PLAYBACK PERFORMANCE
再生系

Initial deck settings
OUTPUT cont.: Max.
MONITOR sw: TAPE
SPEED sw: HIGH (19cm/s)
TAPE sw: NORMAL

TEAC test tapes
YTT-1003: For 19cm/s (7-½ ips), NORMAL
YTT-1002: For 9.5cm/s (3-¾ ips), NORMAL
YTT-8013: For S/N check

ITEM 調整項目		SETTING 設定	INPUT SIGNAL 入力信号	ADJUST 調整個所	RESULT 調整値	REMARKS 備考
1. Playback head azimuth 再生ヘッド・アジマス	1-1	Connection: Fig. 2-24 接続	YTT-1003 (16 kHz/−10 dB)	Azimuth screws アジマス調整ネジ	Both FWD & REV Phase: within 45° 位相 45°以内	Refer to Fig. 2-21 ～25
2. Playback level 再生レベル	2-1	AC voltmeter to REC and PLAY PCB TP.01/ TP.11 and GND.	YTT-1003 (400 Hz/0 dB)	FWD R554/R954 REV R555/R955	TP.01/TP.11 −8 dB (308 mV)	
	2-2	FWD PLAY mode		R556/R956	OUTPUT: −5 dB (436 mV)	Reference level 規定再生レベル
	2-3	Same as above 同上		OUTPUT cont.	OUTPUT R: −11 dB (218 mV)	
				Check チェック	OUTPUT L: −11 dB ±0.5 dB (206 mV～231 mV)	
		Specified playback condition. 規定再生状態	IMPORTANT: Do not touch OUTPUT.cont. during later checks. 注意：以降の調整に於てOUTPUTつまみを動かさないこと.			
3. Frequency response 周波数特性	3-1	Spec. PB condition 規定再生状態 FWD & REV	YTT-1003 (400 Hz/10 kHz)	FWD R550/R950 REV R551/R951	OUTPUT: Nearly equal output level (±1.5 dB) at both frequencies. Then check frequency response (Fig. 3-5). 両周波数の出力がほぼ等しく(±1.5dB) なるよう調整. その後周波数特性をチェック. (図3-5参照).	
	3-2	TAPE sw: NORMAL →EE FWD & REV	YTT-1003 (10 kHz)	Check チェック	OUTPUT: At 10 kHz should be approx. 3dB higher than measured in above step. 10kHzの出力が上記より約3dB上昇すること.	
	3-3	SPEED sw: LOW TAPE sw: NORMAL FWD & REV	YTT-1002 (400 Hz/8 kHz)	Check チェック	OUTPUT: Nearly equal output level (±1.5 dB) at both frequencies. Frequency response: Fig. 3-6 両周波の出力がほぼ等しい(±1.5dB)こと. 周波数特性：図3-6	
	3-4	TAPE sw: NORMAL →EE FWD & REV	YTT-1002 (8 kHz)	Check チェック	OUTPUT: At 8 kHz should be approx. 3 dB higher than measured in above step. 8kHzの出力が上記より3dB上昇すること.	
4. Signal to noise ratio S/N比	4-1	FWD & REV Spec. PB condition 規定再生状態	Fully erased YTT-8013 tape (Use bulk tape eraser) バルク・イレーサで充分消磁されたYTT-8013	Check チェック	OUTPUT S/N: NORMAL HIGH: 53 dB LOW: 50 dB EE HIGH: 56 dB LOW: 53 dB	Ratio of reference level (Item 23) to noise. 基準信号レベルは2-3項の規定再生レベル.

3-3 MONITOR PERFORMANCE
モニタ系

Deck settings
OUTPUT cont. Specified playback condition. <規定再生状態>
MONITOR sw: SOURCE

ITEM 調整項目		SETTING 設定	INPUT SIGNAL 入力信号	ADJUST 調整個所	RESULT 調整値	REMARKS 備考
5. Min. LINE input level LINE最小入力レベル	5-1	AC voltmeter to REC and PLAY PCB TP.03/TP.13 and GND. LINE cont.: MAX MIC cont.: MIN	LINE IN: 400 Hz/–22 dB (61.5 mV)	R557/R957	TP.03/TP.13: –2 dB (615 mV)	
	5-2	Same as above 同上 Connection: Fig.		Check チェック	OUTPUT: –5 dB ±1 dB (388 mV~489 mV)	
6. Min. MIC input level MIC最小入力レベル	6-1	LINE cont.: MIN MIC cont.: MAX	MIC: 400 Hz/–70 dB (245 μV)	Check チェック	OUTPUT: –5 dB ±3 dB (308 mV~615 mV)	
7. Specified LINE input level LINE規定入力レベル	7-1	LINE cont.: MAX MIC cont.: MIN	LINE IN: 400 Hz/–12 dB (195 mV)	LINE cont. (L/R)	OUTPUT R: –5 dB (436 mV)	
	7-2			Check チェック	OUTPUT L: –5 dB ±1 dB (388mV~489mV)	
	7-3			LINE cont. (L)	OUTPUT L: –5 dB (436 mV)	
		LINE specified input condition. IMPORTANT: Do not touch LINE cont. during later checks. LINE規定入力状態 注意：以降の調整に於てLINEつまみを動かさないこと.				
8. VU meter メータ指示	8-1	LINE spec. input condition LINE規定入力状態	LINE IN: 400 Hz/– 12 dB (195 mV)	R558/R958	VU meter: 0 VU	
9. PHONES input level ヘッドホン出力レベル	9-1	Same as above 同上	LINE IN: 400 Hz/–12 dB (195 mV)	Check チェック	PHONES jack: –8.8 dB ±2 dB (224 mV~354mV)	8Ω load Fig. 3-4

3-4 RECORDING PERFORMANCE
録音系

Deck settings
REC MODEsw: L & R both ON
DBXsw: OUT
SPEED sw: HIGH
TAPE sw: EE
MONITOR sw: TAPE
OUTPUT cont.: Spec. PB Condition
LINE cont.: Spec. input condition
MIC cont.: Min
BIAS FINE cont.: Center

TEAC test tape
YTT-8013: Blank tape for NORMAL
YTT-8053: Blank tape for EE

ITEM 調整項目		SETTING 設定	INPUT SIGNAL 入力信号	ADJUST 調整個所	RESULT 調整値	REMARKS 備考
10. Bias trap バイアス・トラップ	10-1	AC voltmeter between TP.05/TP.15 and GND YTT-8053	No signal 無信号	L306/L406	TP.05/TP.15: Min. reading バイアス漏れ 最小	Bias frequency バイアス周波数 150 kHz
	10-2	AC voltmeter between TP.01/TP.11 and GND YTT-8053	No signal 無信号	L301/L401	TP.01/TP.11: Min. reading バイアス漏れ 最小	
11. Record bias 録音バイアス	11-1	First set adjustor fully CCW (↺), then adjust. 最初に半固定抵抗を左一杯にまわしておいてから調整を始める.				
		YTT-8053 SPEED sw: HIGH TAPE sw: EE	LINE IN: 7 kHz/–42 dB (6.15 mV)	FWD R572/R972 REV R573/R973	OUTPUT: Over-bias value オーバー・バイアス値 2.5 dB	

ITEM 調整項目		SETTING 設定	INPUT SIGNAL 入力信号	ADJUST 調整個所	RESULT 調整値	REMARKS 備考
12. EE record level EE録音レベル	12-1	YTT-8053 SPEED sw: HIGH TAPE sw: EE	LINE IN: 400 Hz/–12 dB (195 mV)	FWD R559/R959 REV R560/R960	OUTPUT: –5 dB (436 mV)	
	12-2			Check チェック	VU meter: 0 VU ±0.5 VU	
	12-3	Same as above 同上 DBX sw: IN		Check チェック	OUTPUT: –5 dB ±1.5 dB (367 mV~518 mV)	
	12-4	Same as above 同上 DBX sw: OUT MONITOR sw: TAPE/SOURCE	No signal 無信号	Check チェック	OUTPUT: Bias leak: バイアス漏れ less than –51 dB (2.18 mV)	
13. Record head azimuth 録音ヘッド・アジマス	13-1	YTT-8053 SPEED sw: HIGH TAPE sw: EE DBX sw: OUT MONITOR sw: TAPE	LINE IN: 400 Hz/–12 dB (195 mV)	Record head azimuth screws 録音ヘッド・アジマス調整ネジ	Phase 位相：0°	Refer to Fig. 2-21 ~ 25
			アジマス調整ネジを動かした場合は12-1~3項を再チェックすること.			
14. EE frequency response EE周波数特性 (SPEED:HIGH)	14-1	Same as above 同上	LINE IN: 400 Hz & 20 kHz alternately 交互信号 /–42 dB (6.15 mV)	FWD R568/R968 REV R569/R969	OUTPUT: Equal level at both frequency 両周波数の出力が等しくなるよう調整.	
	14-2		LINE IN: 400 Hz & 10 kHz alternately 交互信号 /–42 dB (6.15 mV)	OUTPUT: Output level of the 10 kHz signal should be within ±1.5 dB with regards to the 400 kHz-signal output level. If the level is lower than –1.5 dB, correct it by cutting off R596/R996. 400Hzの出力レベルに対し,10kHzの出力レベルが±1.5dB以内であること. もし−1.5dBよりレベルが低い場合はR596／R996をカットして調整.		
	14-3		LINE IN: –42 dB (6.15 mV)	Check チェック	Frequency response: Fig. 3-7 周波数特性：図3-7	
	14-4	Same as above 同上 DBX sw: IN	LINE IN: –42 dB (6.15 mV)	Check チェック	Frequency response: Fig. 3-9 周波数特性：図3-9	
15. EE frequency response EE周波数特性 (SPEED: LOW)	15-1.	YTT-8053 SPEED sw: LOW TAPE sw: EE DBX sw: OUT MONITOR sw: TAPE	LINE IN: 400 Hz & 5 kHz alternately 交互信号 /–42 dB (6.15 mV)	R570 (Bias adj.)	OUTPUT: Equal level at both frequency 両周波数の出力が等しくなるよう調整.	
	15-2		LINE IN: 400 Hz & 20 kHz alternately 交互信号 /–42 dB (6.15 mV)	FWD R564/R964 REV R565/R965	Same as above 同上	
	15-3		LINE IN: –42 dB (6.15 mV)	Check チェック	Frequency response: Fig. 3-8 周波数特性：図3-8	
	15-4	Same as above 同上 DBX sw: IN	LINE IN: –42 dB (6.15 mV)	Check チェック	Frequency response: Fig. 3-10 周波数特性：図3-10	

ITEM 調整項目		SETTING 設定	INPUT SIGNAL 入力信号	ADJUST 調整個所	RESULT 調整値	REMARKS 備考
16. NORMAL frequency response NORMAL 周波数特性 (SPEED:HIGH)	16-1	YTT-8013 SPEED sw: HIGH TAPE sw: NORMAL DBX sw: OUT MONITOR sw: TAPE	LINE IN: 400 Hz & 10 kHz alternately 交互信号 /−42 dB (6.15 mV)	R574 (Bias adj.)	OUTPUT: Equal level at both frequency 両周波数の出力が等しくなるよう調整.	
	16-2		LINE IN: 400 Hz & 20 kHz alternately 交互信号 /−42 dB (6.15 mV)	FWD R566/R966 REV R567/R967	Same as above 同上	
	16-3		LINE IN: −42 dB (6.15 mV)	Check チェック	Frequency response: Fig. 3-7 周波数特性：図3-7	
	16-4	Same as above 同上 DBX sw: IN	LINE IN −42 dB (6.15 mV)	Check チェック	Frequency response: Fig. 3-9 周波数特性：図3-9	
17. NORMAL record level NORMAL 録音レベル	17-1	Same as above 同上 DBX sw: OUT	LINE IN: 400 Hz/−12 dB (195 mV)	R561/R961	OUTPUT: −5 dB (436 mV)	
	17-2			Check チェック	VU meter: 0 VU ±0.5 VU	
	17-3	Same as above 同上 DBX sw: IN		Check チェック	OUTPUT: −5 dB ±1.5 dB (367 mV~518 mV)	
	17-4	Same as above 同上 DBX sw: OUT MONITOR sw: TAPE/SOURCE	No signal 無信号	Check チェック	OUTPUT: Bias leak バイアス漏れ less than −51 dB (2.18 mV)	
18. NORMAL frequency response NORMAL 周波数特性 (SPEED: LOW)	18-1	YTT-8013 SPEED sw: LOW TAPE sw: NORMAL DBX sw: OUT MONITOR sw: TAPE	LINE IN: 400 Hz & 5 kHz alternately 交互信号 /−42 dB (6.15 mV)	R571 (Bias adj.)	OUTPUT: Equal level at both frequency 両周波数の出力が等しくなるよう調整.	
	18-2		LINE IN: 400 Hz & 20 kHz alternately 交互信号 /−42 dB (6.15 mV)	FWD R562/R962 REV R563/R963	Same as above 同上	
	18-3		LINE IN: −42 dB (6.15 mV)	Check チェック	Frequency response: Fig. 3-8 周波数特性：図3-8	
	18-4	Same as above 同上 DBX sw: IN	LINE IN: −42 dB (6.15 mV)	Check チェック	Frequency response: Fig. 3-10 周波数特性：図3-10	
19. Monaural recording モノラル録音	19-1	YTT-8013 SPEED sw: LOW TAPE sw: NORMAL DBX sw: OUT MONITOR sw: TAPE REC MODE sw: L:ON R:OFF	LINE IN: −42 dB (6.15 mV)	FWD: L304 REV: L305	Frequency response 周波数特性 Fig. 3-8	
	19-2	Same as above 同上 REC MODE sw: L:OFF R:ON		Check チェック		
20. BIAS FINE バイアス・ファイン	20-1	YTT-8013 SPEED sw: LOW TAPE sw: NORMAL DBX sw: OUT MONITOR sw: TAPE REC MODE sw: ON	LINE IN: 16 kHz/−42 dB (6.15 mV)	Assume an output reference level obtained when the BIAS FINE button is set to center. Turn BIAS FINE completely to left and right and check that output level varies between −3 dB and +2 dB or higher against the reference level. BIAS FINEつまみがセンタ位置の時の出力を基準レベルとする. BIAS FINEつまみを左右一杯にまわしたときの出力レベルが基準レベルに対し+2・−3dB以上変化することをチェックする.		
			After checking, be sure to set BIAS FINE back to the center position. チェック後BIAS FINEつまみをセンタ位置に戻しておくこと.			
21. Distortion 歪率	21-1	Same as above 同上 SPEED sw: HIGH	LINE IN: 400 Hz/−18 dB (97.5 mV)	Check チェック	DBX sw: both IN & OUT TAPE sw: both EE & NORMAL Tortal harmonic distortion 全高調波歪 (0.8%以下) less than 0.8 %	

ITEM 調整項目		SETTING 設定	INPUT SIGNAL 入力信号	ADJUST 調整個所	RESULT 調整値	REMARKS 備考
22. Signal to noise ratio check S/Nチェック	22-1	YTT-8053 & YTT-8013 SPEED sw:HIGH&LOW TAPE sw:EE&NORMAL DBX sw: OUT	No signal 無信号	Output noise levels when "no-signal" recording is played back (S/N zero reference level corresponds to −5 dB of noise level) 無信号録音後テープを巻戻して，再生した時の出力雑音レベル(S/Nの基準レベルは−5dB)		

SPEED	TAPE	NOISE LEVEL	S/N
HIGH	YTT-8053	−61 dB (690 μV)	56 dB
	YTT-8013	−58 dB (975 μV)	53 dB
LOW	YTT-8053	−58 dB (975 μV)	53 dB
	YTT-8013	−56 dB (1.23 mV)	51 dB

23. Erase efficiency 消去効果	23-1	• Record a 1 kHz signal, rewind and erase a portion of the recording. Playback the tape to compare the output level from the original 1 kHz recording with the level from the erased portion. 1kHz信号を録音後巻戻して一部を消去，未消去部分と消去部分の1kHz出力レベル差を測定． • Connection is same as in Fig. 3-3, but engage 1 kHz filter. 1kHz B.P.F. 使用 • The worst value should be within spec. 最悪値が仕様を満足すること． • Specifications should be met even when BIAS FINE is turned down to its minimum setting. BIAS FINEつまみ最小でも仕様を満足すること．				
		Same as above 同上	LINE IN: 1 kHz/−2 dB (615 mV)	Check チェック	Each tape and speed 各テープと速度 68 dB min. ratio	
24. Channel separation チャネル・セパレーション	24-1	• Connection: Fig. 3-3, but do not connect LINE IN (R), and engage 1 kHz filter. 1kHz B.P.F使用 • Set the deck to record mode. Find the difference between the 1 kHz recorded portion (L ch) and the "no-signal" portion (R ch). Then change the connection and check reverse portion. 1kHz録音部分(Lch)と無信号録音部分(Rch)の1kHz再生出力レベルの差を測定．L,Rを入れ替えた場合についてもチェック．				
		YTT-8053 SPEED sw: HIGH TAPE sw: EE	LINE IN: Lch: 1kHz/−12dB (195 mV) Rch: No signal	Check チェック	50 dB min. ratio	
25. Adjacent track crosstalk トラック間クロストーク	25-1	• Record a 125 Hz signal on R channel in forward recording mode. Play the tape in reverse playback mode to measure output level from L channel and compare it with output level from R channel. Rchに125HzをFWD録音し，その再生出力を基準レベルとする．次にそのテープをREV再生し，Lchの再生出力と基準レベルとの差を測定． • Perform the same procedures in reverse recording and forward playback modes. Check also Lch to Rch crosstalk. REV録音，FWD再生の場合についてもチェック．またLchについても同様にチェック．				
		YTT-8053 SPEED sw: HIGH TAPE sw: EE	LINE IN: L ch: No signal R ch: 125Hz/−12dB (195 mV)	Check チェック	40 dB min. ratio	
26. REC MUTE function REC MUTE効果	26-1	• Connection: Fig. 3-3, but engage 1 kHz filter. 1kHz P.B.F使用 • Record a 1 kHz signal. Push REC MUTE button for several seconds. (At this time, make sure LED on the button lights). Rewind and play the tape. Find the difference between the 1 kHz portion and "rec-mute" portion. 1kHzを録音し，途中でREC MUTE釦を押して無信号部分を作る．このテープを再生し録音部分と無信号部分との出力レベル差を測定する．				
		YTT-8053 SPEED sw: HIGH TAPE sw: EE	LINE IN: 1 kHz/−2 dB (615 mV)	Check チェック	65 dB min. ratio	
27. Phase shift フェーズ・シフト	27-1	YTT-8013 SPEED sw: HIGH TAPE sw: NORMAL	LINE IN: 1 kHz Sawtooth /−12 dB 矩形波	R576/R976	Correct waveform (良) Incorrect waveform (不良) 	

3-5 FREQUENCY RESPONSE
周波数特性

3-5-1 PLAYBACK

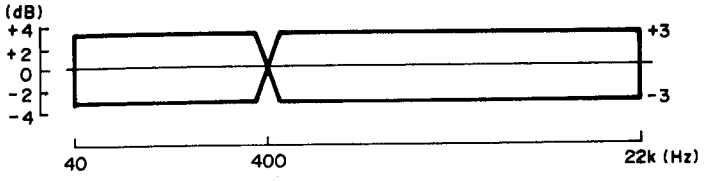

Fig. 3-5 Playback frequency response (19cm/s)

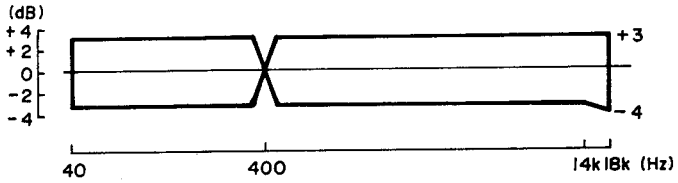

Fig. 3-6 Playback frequency response (9.5cm/s)

3-5-2 OVERALL

YTT-8013, NORMAL ———
YTT-8053, EE ------

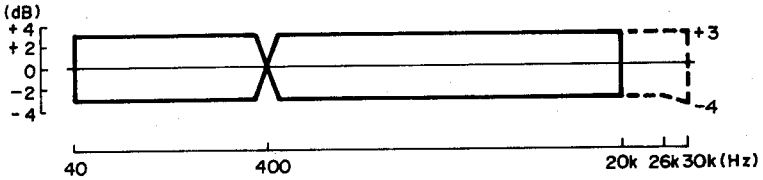

Fig. 3-7 Overall frequency response (19cm/s)

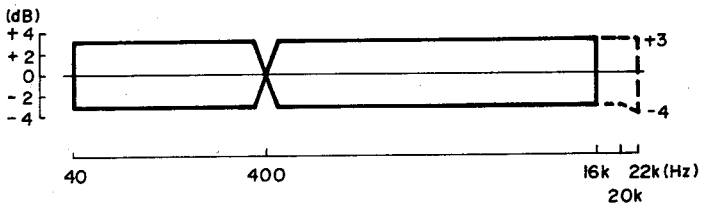

Fig. 3-8 Overall frequency response (9.5cm/s)

3-5-3 OVERALL WITH DBX IN

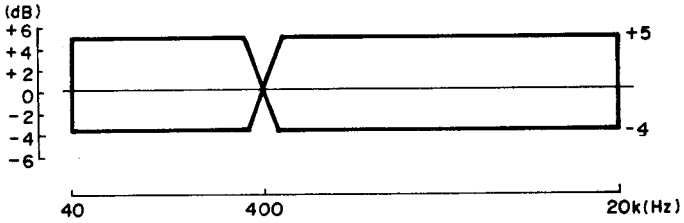

Fig. 3-9 Overall frequency response with DBX IN (19cm/s)

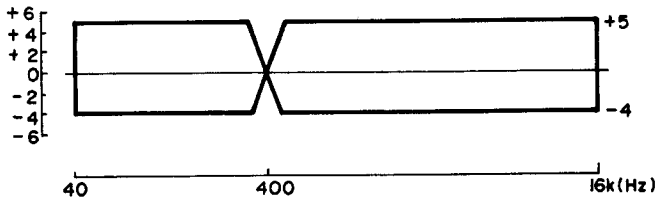

Fig. 3-10 Overall frequency response with DBX IN (9.5cm/s)

3-6 DBX PCB ADJUSTMENT

NOTES:

1. This section adjustment is not usually needed unless an adjustor(s) have been changed or a component(s) on the PC board have sustained damage, since the PC board has been precisely adjusted in the factory.
2. Turn the deck OFF to prevent accidental damage when removing or replaceing PC board.

3-6 DBX基板単体調整

注意

1. DBX基板の部品交換を行なった場合の他，通常はDBX基板単体の調整は不要です．
2. 基板やコネクタを外す場合は必ずデッキの電源を切ってから行なってください．

3-6-1 ADJUSTMENT POINTS LOCATION
調整個所

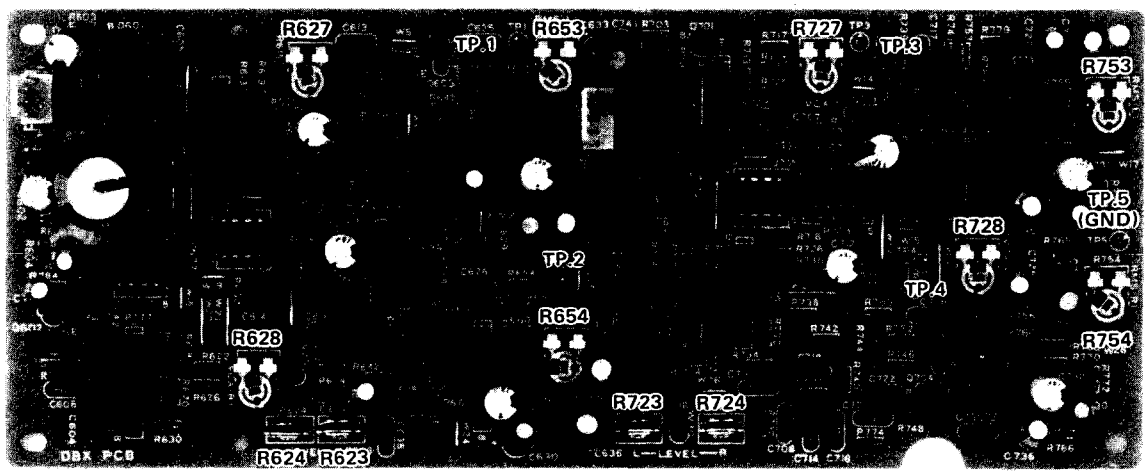

	Lch/Rch		
ENCODER (エンコーダ)	R727/R728	VCA symmetry	VCA シンメトリー
	R723/R724	Nominal level	基準レベル
	R753/R754	RMS symmetry	RMS シンメトリー
DECODER (デコーダ)	R627/R628	VCA symmetry	VCA シンメトリー
	R623/R624	Nominal level	基準レベル
	R653/R654	RMS symmetry	RMS シンメトリー

Fig. 3-11

3-6-2 VCA SYMMETRY ADJUSTMENT WAVE FORM
VCA シンメトリ調整波形

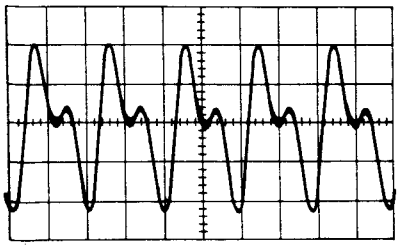

Fig. 3-12 RMS symmetry adjustment (incorrect)
(RMSシンメトリ調整・不良)

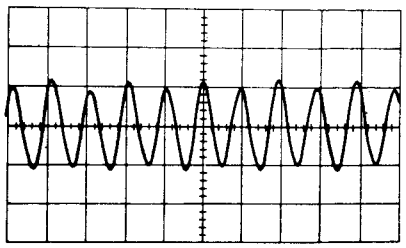

Fig. 3-13 RMS symmetry adjustment (correct)
(RMSシンメトリ調整・良)

3-6-3 DECODER ADJUSTMENT
デコーダ調整

ITEM 調整項目	SETTING 設定	INPUT SIGNAL 入力信号	ADJUST 調整個所	RESULT 調整値	REMARKS 備考
1. Preparation 準備	Preset each of the trimmers of the decoder section on the PCB to their approximate center positions. 各半固定抵抗をセンター位置にする.				
2. RMS SYM	Fig. 3-14	P601-1/P601-4 100 Hz/−8.2 dB (300 mV)	R653/R654	TP.1/TP.2: Clean 200 Hz sine-wave 出力波形が200Hzの正弦波になるよう調整.	Refer to Figs. 3-12 and 3-13.
3. VCA SYM	Fig. 3-15	TP.1/TP.2 Staircase waveform 階段波	R627/R628	P603-1/P603-4 A relatively straight horizontal line on the 'scope face'. (Level variation: 5 mV or less) モニタ波形がほぼ一直線(5mV以下)になるよう調整.	
4. Decoding level 基準レベル調整	Fig. 3-16	P601-1/P601-4 1 kHz/−8.2 dB (300 mV)	R623/R624	P603-1/P603-4 −8.2 dB (300 mV)*	*Reference 1 基準レベル1
5. Operation level デコード効果チェック	Fig. 3-16	P601-1/P601-4 1 kHz/−18.2 dB (95.4 mV)	Check チェック	P603-1/P603-4 −20 dB ±1 dB against Ref. 1 (26.9 mV ~ 33.8 mV)	基準レベル1からの変化.
		P601-1/P601-4 1 kHz/+1.8 dB(954 mV)	Check チェック	P603-1/P603-4 +20 dB ±1 dB against Ref. 1 (2.67 V ~ 3.38 V)	
6. Frequency response 周波数特性	Fig. 3-16	P601-1/P601-4 100 Hz/−8.2 dB (300 mV)	Check チェック	P603-1/P603-4 +5 dB ±1 dB against Ref. 1 (477 mV ~ 602 mV)	基準レベル1からの変化.
		P601-1/P601-4 10 kHz/−8.2 dB (300 mV)	Check チェック	P603-1/P603-4 +9.4 dB ±1 dB against Ref. 1 (793 mV ~ 997 mV)	

3-6-4 ENCODER ADJUSTMENT
エンコーダ調整

ITEM 調整項目	SETTING 設定	INPUT SIGNAL 入力信号	ADJUST 調整個所	RESULT 調整値	REMARKS 備考
7. Preparation 準備	Preset each of the trimmers of the encoder section on the PCB to their approximate center positions. 各半固定抵抗をセンター位置にする.				
8. RMS SYM	Fig. 3-17	P701-1/P701-5 100 Hz/−8.2 dB (300 mV)	R753/R754	TP.3/TP.4 Clean 200 Hz sine-wave 出力波形が200Hzの正弦波になるよう調整.	Refer to Figs. 3-12 and 3-13.
9. VCA SYM	Fig. 3-18	TP.3/TP.4 Staircase waveform 階段波	R727/R728	P703-1/P703-5 A relatively straight horizontal line on the "scope face". (Level variation: 5 mV or less) モニタ波形がほぼ一直線(5mV以下)になるよう調整.	
10. Encoding level 基準レベル調整	Fig. 3-19	P701-1/P701-5 1 kHz/−8.2 dB (300 mV)	R723/R724	P703-1/P703-5 −8.2 dB (300 mV)*	*Reference 2 基準レベル2
11. Operation level エンコード効果チェック	Fig. 3-19	P701-1/P701-5 1 kHz/−68.2 dB (3 mV)	Check チェック	P703-1/P703-5 −30 dB ±0.5 dB against Ref. 2 (9.54 mV ~ 10.1 mV)	基準レベル2からの変化.
		P701-1/P701-5 1 kHz/+11.2 dB (3 V)	Check チェック	P703-1/P703-5 +10 dB ±0.5 dB against Ref. 2 (900 mV ~ 1.01 V)	
12. Frequency response 周波数特性	Fig. 3-19	P701-1/P701-5 100 Hz/−8.2 dB (300 mV)	Check チェック	P703-1/P703-5 −2.5 dB ±0.5 dB against Ref.2 (213 mV ~ 240 mV)	基準レベル2からの変化.
		P701-1/P701-5 10 kHz/−8.2 dB (300 mV)	Check チェック	P703-1/P703-5 −4.7 dB ±0.5 dB against Ref. 2 (166 mV ~ 186 mV)	

3-6-5 CONNECTIONS

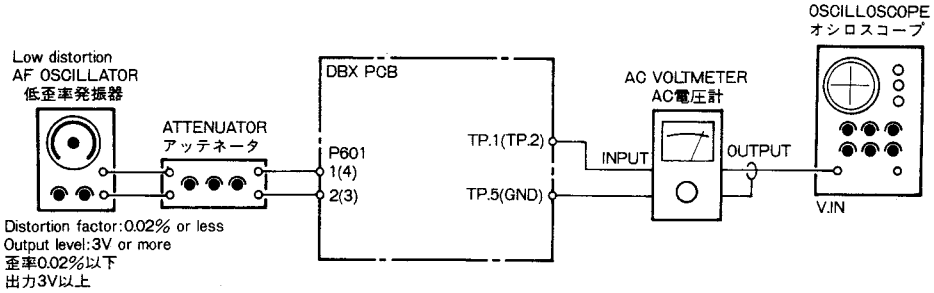

Fig. 3-14 RMS symmetry adjustment setup (decoder)

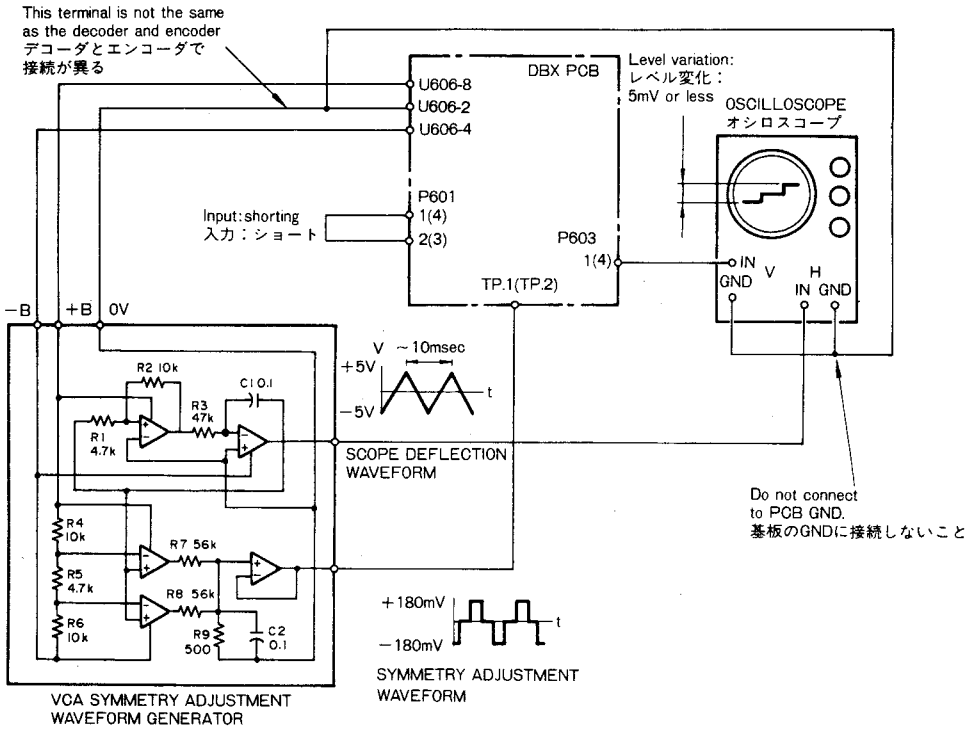

Fig. 3-15 VCA symmetry adjustment setup (decoder)

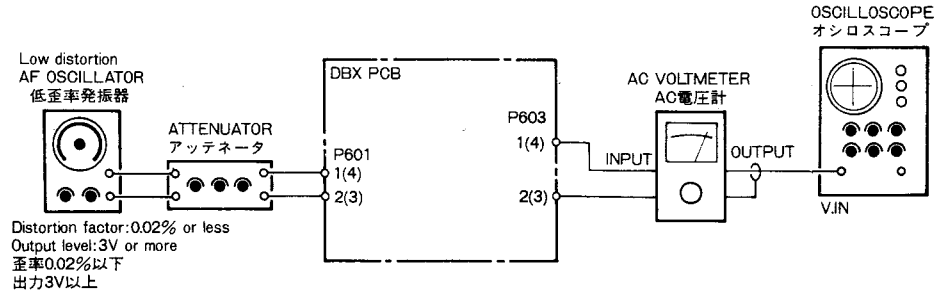

Fig. 3-16 Decoding level adjustment setup (decoder)

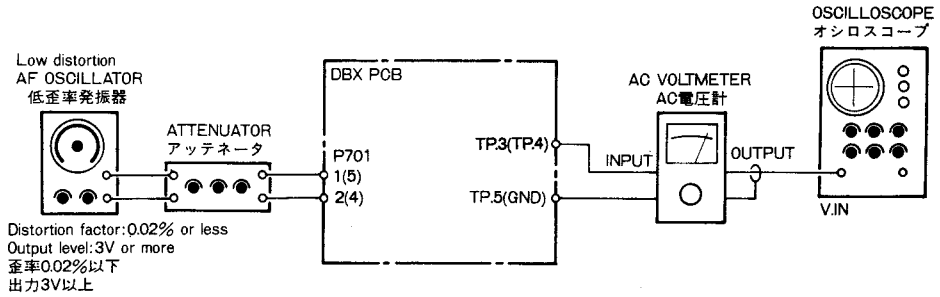

Fig. 3-17 RMS symmetry adjustment setup (encoder)

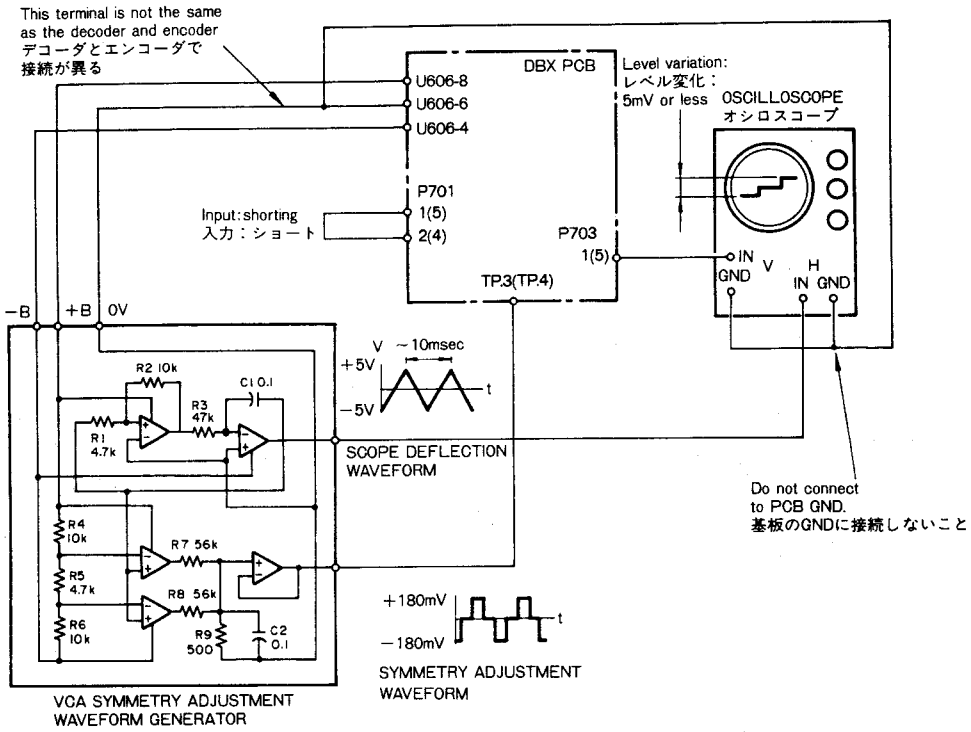

Fig. 3-18 VCA symmetry adjustment setup (encoder)

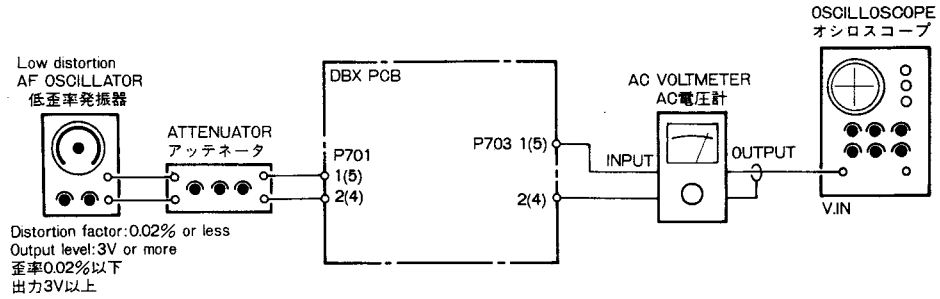

Fig. 3-19 Decoding level adjustment setup (encoder)

3-7 IC BLOCK DIAGRAMS

LM6402H-325

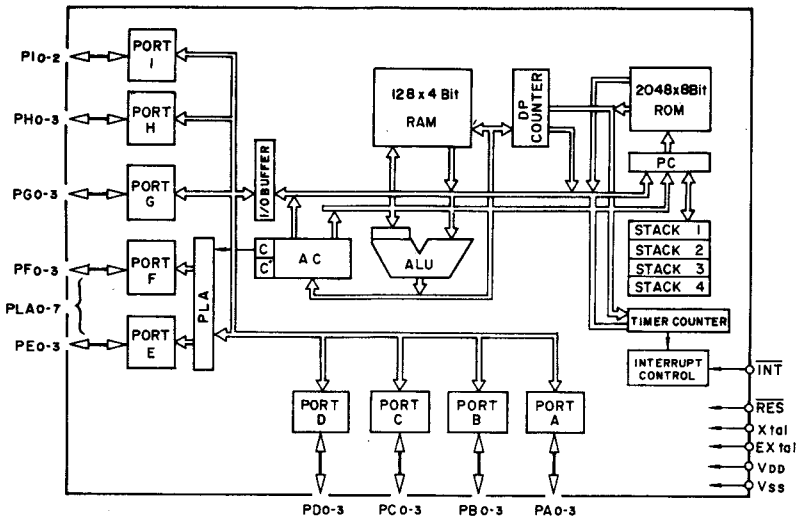

LB1475

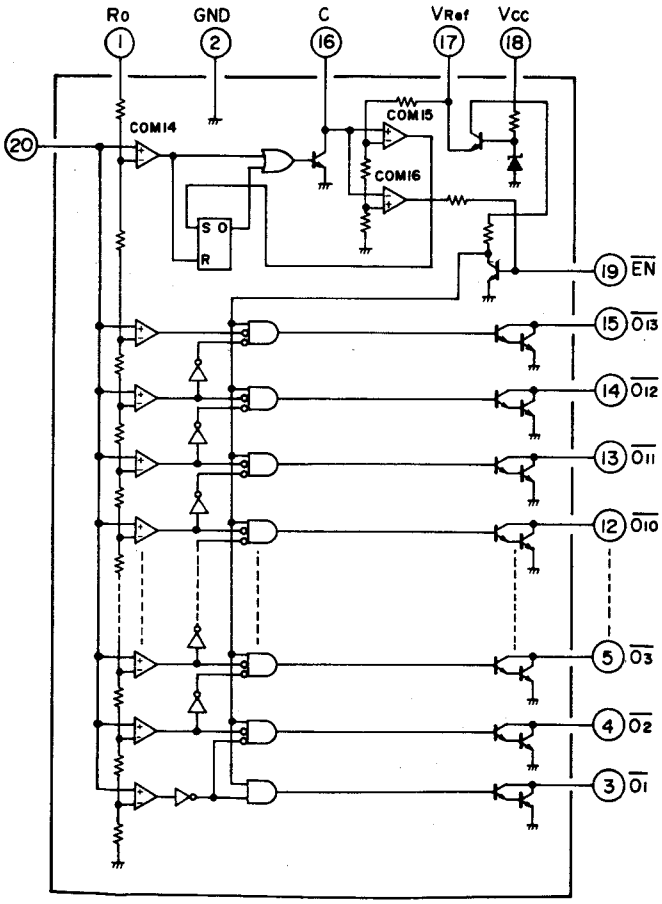

BA6251

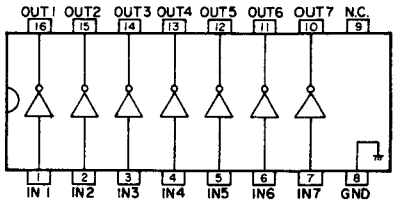

LA6358

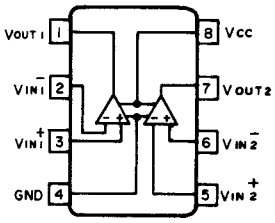

LM6405H-320

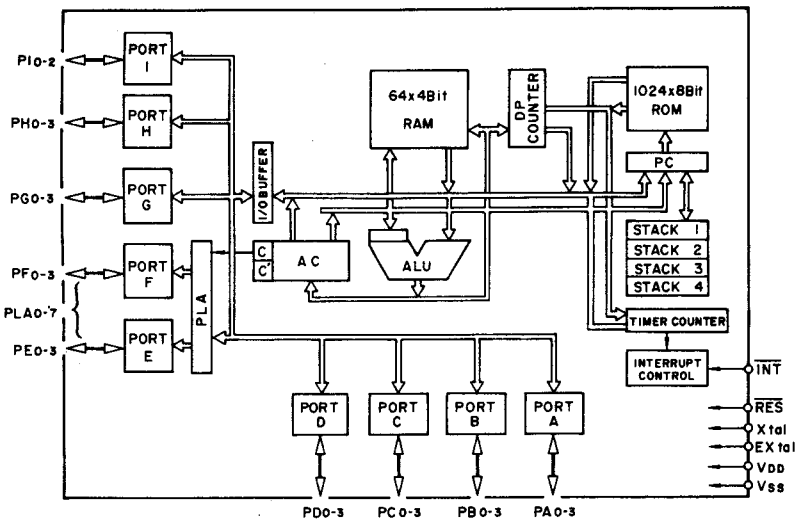

LC7800

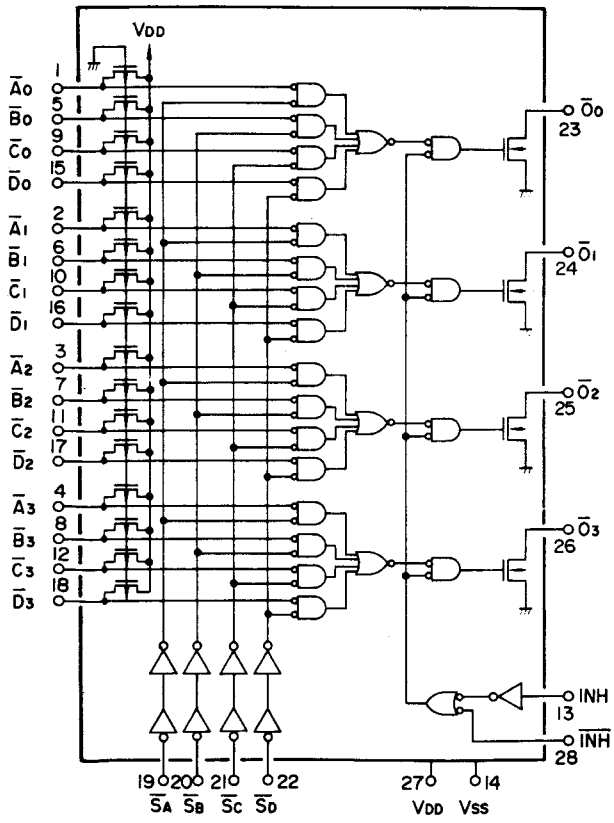

MC14584BCP

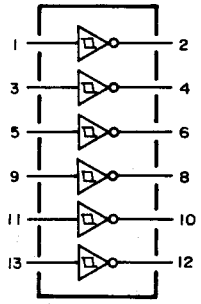

4 EXPLODED VIEWS AND PARTS LIST

分解図とパーツ・リスト

EXPLODED VIEW-1

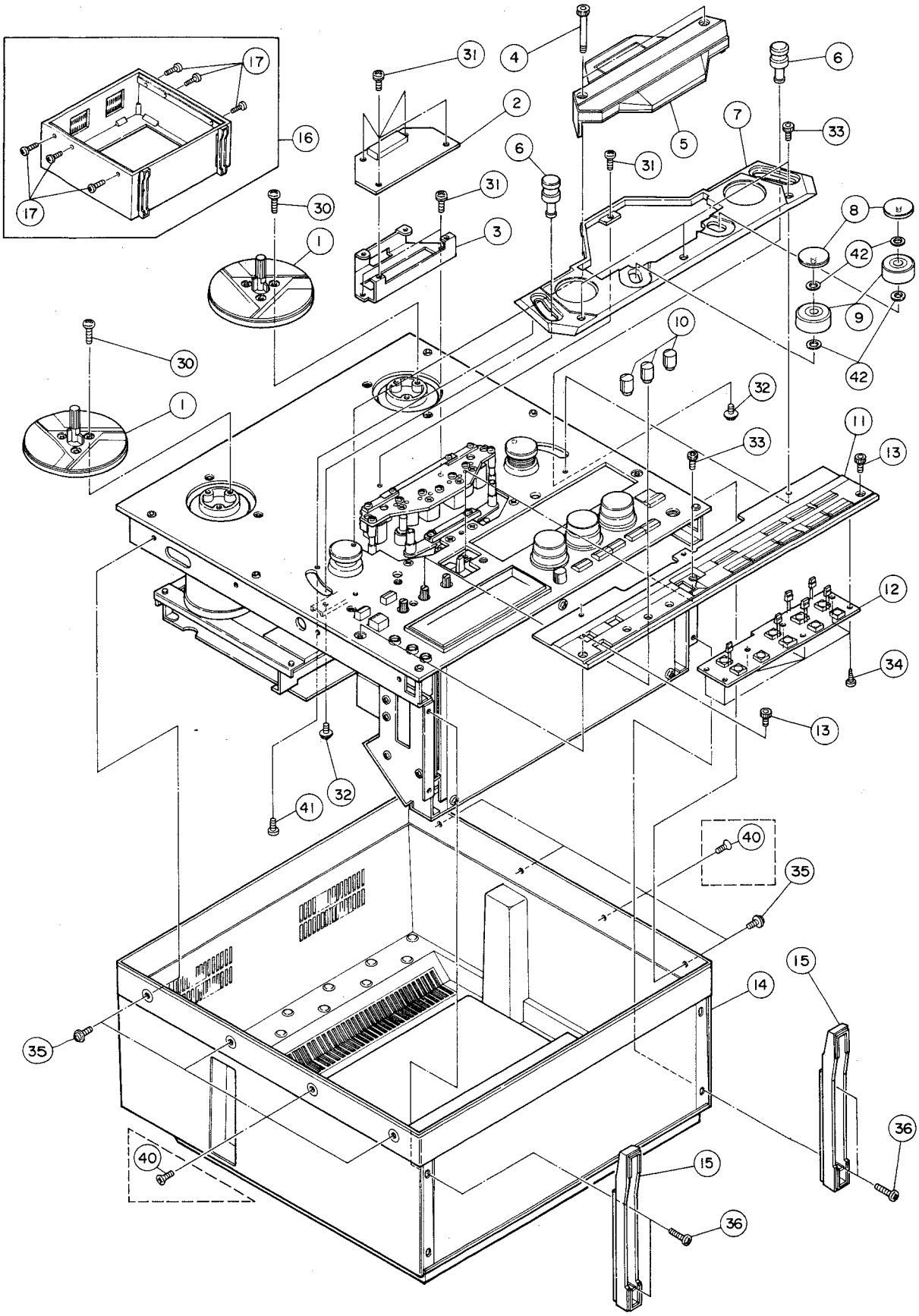

REF. NO.	PARTS NO.	DESCRIPTION	COMMON MODELS	REMARKS
1 - 1	5504744000	Table Assy, Reel	X-10R	
1 - 2	*5200136000	PCB Assy, COUNTER		
1 - 3	*5800553500	Chassis, Tape Counter		
1 - 4	5800285000	Cap Screw (X-2000R)	X-1000R	
	5800323400	Cap Screw (X-2000R BL)	X-1000R BL	
1 - 5	*5800543900	Housing Assy, Head; S (X-2000R)		
	*5800543800	Housing Assy, Head; B (X-2000R BL)		
1 - 6	5800549500	Roller Assy, Tension; S (X-2000R)		
	5800549400	Roller Assy, Tension; B (X-2000R BL)		
1 - 7	*5800544800	Housing Base; S (X-2000R)		
	*5800544700	Housing Base; B (X-2000R BL)		
1 - 8	5800549300	Cap, Pinch Roller; S (X-2000R)		
	5800549200	Cap, Pinch Roller; B (X-2000R BL)		
1 - 9	5014175100	Pinch Roller	A-2300	
1 - 10	5800546600	Knob, Small-Size		
1 - 11	*5800545000	Panel Assy, Control; S (X-2000R)		
	*5800544901	Panel Assy, Control; B (X-2000R BL)		
1 - 12	*5200135900	PCB Assy, OPERATION		
1 - 13	5800553700	Cap Screw, S (X-2000R)		
	5800553600	Cap Screw, B (X-2000R BL)		
1 - 14	*5800556100	Case, LB		
1 - 15	*5533190000	Foot [All except L]	X-10R	
1 - 16	*5800321602	Case Assy [L]	X-1000R	
1 - 17	*5504499000	Screw, Case [L]	A-480	
1 - 30	*5780014008	Screw, Bind Head M4 x 8 (Ni)		
1 - 31	*5780133006	Screw, Pan Head Sems A Type M3 x 6		
1 - 32	*5780143006	Screw, Pan Head Sems B Type M3 x 6		
1 - 33	*5781703010	Screw, Cap M3 x 10 (Ni) (X-2000R)		
	*5781713010	Screw, Cap M3 x 10 (BLK Ni) (X-2000R BL)		
1 - 34	*5781103008	Screw, Bind Tapping M3 x 8		
1 - 35	*5783114006	Screw, Round Washer Head M4 x 6 (BLK Ni)		
1 - 36	*5780004020	Screw, Bind Head M4 x 20		
1 - 37	*5781622106	Screw, Round Head Wood M2.1 x 6.3(BLK Ni)		
1 - 38	*5781613110	Screw, Flat Countersunk Head Wood M3 x 10		
1 - 39	*5781603116	Screw, Round Head Wood M3.1 x 16		
1 - 40	*5780204010	Screw, Flat Countersunk Head M4 x 10		
1 - 41	*5781123010	Screw, Bind Tapping M3 x 10		
1 - 42	*5785315000	Washer, Flat ϕ5 x ϕ8 x t0.5		

Parts marked with *require longer delivery time.

[U] : U.S.A. [C] : CANADA [GE] : GENERAL EXPORT [A] : AUSTRALIA
[E] : EUROPE [UK] : U.K. [L] : LIMITED AREA [J] : JAPAN

EXPLODED VIEW-2

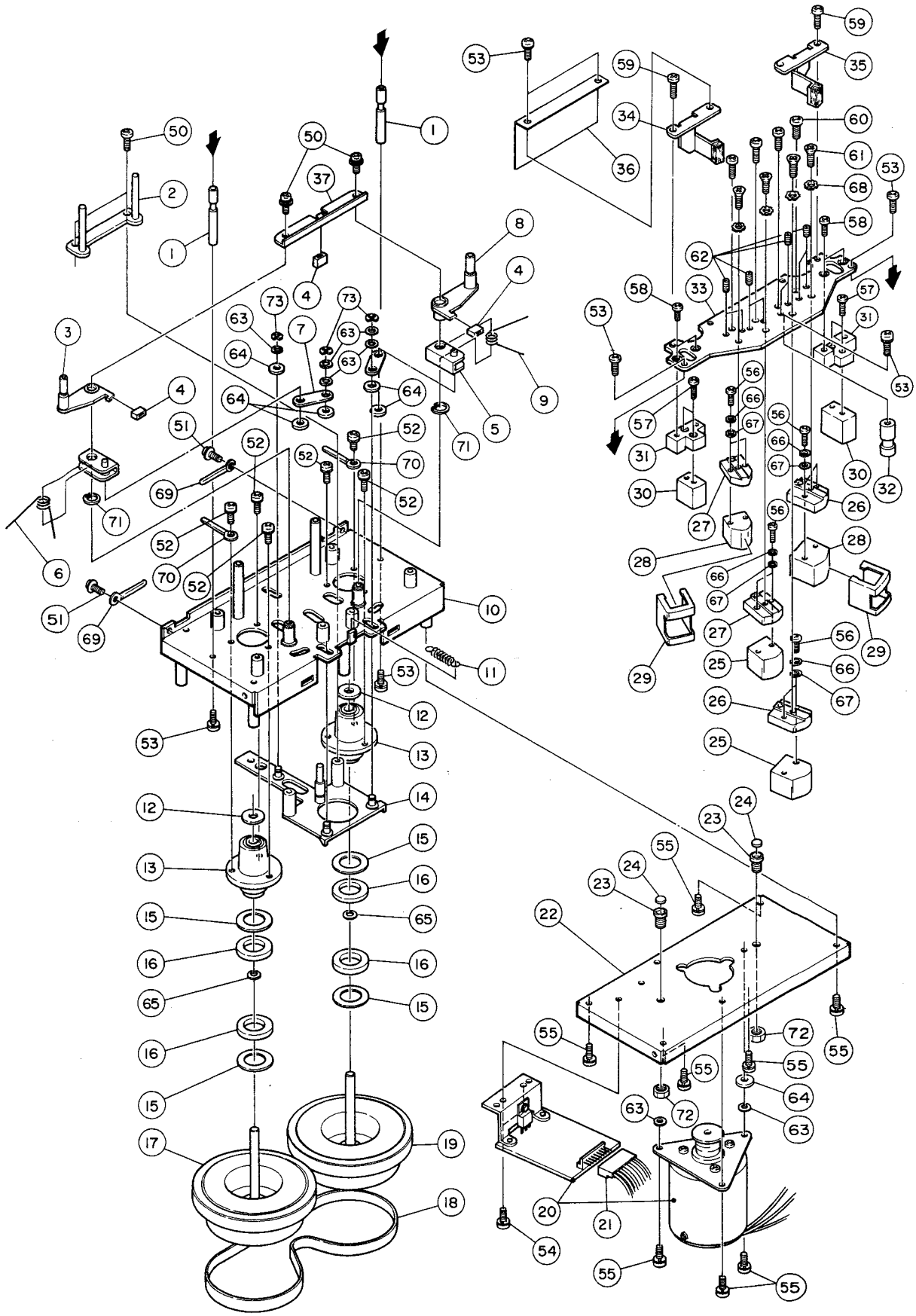

REF. NO.	PARTS NO.	DESCRIPTION	COMMON MODELS	REMARKS
2 - 1	*5545023001	Pin, Tape Guide	X-10R	
2 - 2	*5800554200	Plate Assy, Lifter		
2 - 3	*5504730000	Arm Assy, Pinch Roller; L	X-10R	
2 - 4	*5534694000	Cushion, Stopper	X-10R	
2 - 5	*5504731000	Arm Assy, Pressure	X-10R	
2 - 6	*5524217000	Spring, Pinch Roller; L	X-10R	
2 - 7	*5555667000	Plate, Joint	X-10R	
2 - 8	*5504729000	Arm Assy, Pinch Roller; R	X-10R	
2 - 9	*5524216000	Spring, Pinch Roller; R	X-10R	
2 - 10	*5800527500	Base Assy, Capstan	X-1000R	
2 - 11	*5524219000	Spring, Slide Plate	X-10R	
2 - 12	*5534695000	Washer, Oil Retaining	X-10R	
2 - 13	5504726100	Housing Assy, Capstan Flywheel	X-10R	
2 - 14	*5800526400	Plate Assy, Slide	X-1000R	
2 - 15	*5555704000	Tape, Adhesive	X-10R	
2 - 16	5534715000	Magnet Ring, Thrust	X-10R	
2 - 17	5504728000	Flywheel Assy, Capstan; L	X-10R	
2 - 18	5534692001	Belt, Capstan; 4T	X-10R	
2 - 19	5504727000	Flywheel Assy, Capstan; R	X-10R	
2 - 20	7105018003	DC Motor Assy, Capstan	X-7R	
2 - 21	*5122172000	Connector Socket, 10P		
2 - 22	*5800138000	Plate, Bearing; F	X-20R	
2 - 23	*5544003000	Screw, Bearing	A-7300	
2 - 24	*5555703000	Bearing	X-10R	
2 - 25	5378303000	Head, Record; 4T-2Ch		
2 - 26	*5800568401	Base, Head; FWD		
2 - 27	*5800568501	Base, Head; REV		
2 - 28	5378302900	Head, Playback; 4T-2ch		
2 - 29	*5800568600	Case, Shield		
2 - 30	5378300800	Head, Erase; 4TR	X-20R	
2 - 31	*5800285300	Spacer, Erase Head	X-1000R	
2 - 32	*5800554100	Guide, Tape		
2 - 33	*5800554000	Base, Head		
2 - 34	5800586200	Arm Assy, Pad; L		
2 - 35	5800586100	Arm Assy, Pad; R		
2 - 36	*5800566600	Shield Plate, Counter		
2 - 37	*5555666000	Plate, Reinforcement	X-10R	
2 - 50	*5780143006	Screw, Pan Head Sems B M3 x 6		
2 - 51	*5780143008	Screw, Pan Head Sems B M3 x 8		
2 - 52	*5780134010	Screw, Pan Head Sems A M4 x 10		
2 - 53	*5780133008	Screw, Pan Head Sems A M3 x 8		
2 - 54	*5780103006	Screw, Pan Head M3 x 6		
2 - 55	*5780134008	Screw, Pan Head Sems A M4 x 8		
2 - 56	*5780012006	Screw, Bind Head M2 x 6 (Ni)		
2 - 57	*5782802008	Screw B Tite M2 x 8		
2 - 58	*5783013008	Screw, Pan Head B Tite M3 x 8		
2 - 59	*5783033508	Screw, Bind Head S Tite M3.5 x 8		
2 - 60	*5780003008	Screw, Bind Head M3 x 8		
2 - 61	*5780203008	Screw, Flat Countersunk M3 x 8		
2 - 62	*5782003006	Set Screw, Hex Socket (Flat Point) M3 x 6		
2 - 63	*5785004000	Washer		
2 - 64	*5785024200	Washer, Flat ϕ4 x ϕ12 x t0.8		
2 - 65	*5785316000	Washer, Flat ϕ6 x ϕ9.5 x t0.5		
2 - 66	*5785102000	Washer, Spring ϕ2		
2 - 67	*5785002000	Washer, Flat		
2 - 68	*5785123000	Washer, Lock ϕ3		
2 - 69	*5786713000	Clamper, Cord ϕ3		
2 - 70	*5786714000	Clamper, Cord ϕ4		
2 - 71	*5786118000	Ring ϕ8		
2 - 72	*5781836000	Nut, Type 3 M6		
2 - 73	*5786003000	Ring, E Type ϕ3		

Parts marked with *require longer delivery time.

[U] : U.S.A. [C] : CANADA [GE] : GENERAL EXPORT [A] : AUSTRALIA
[E] : EUROPE [UK] : U.K. [L] : LIMITED AREA [J] : JAPAN

EXPLODED VIEW-3

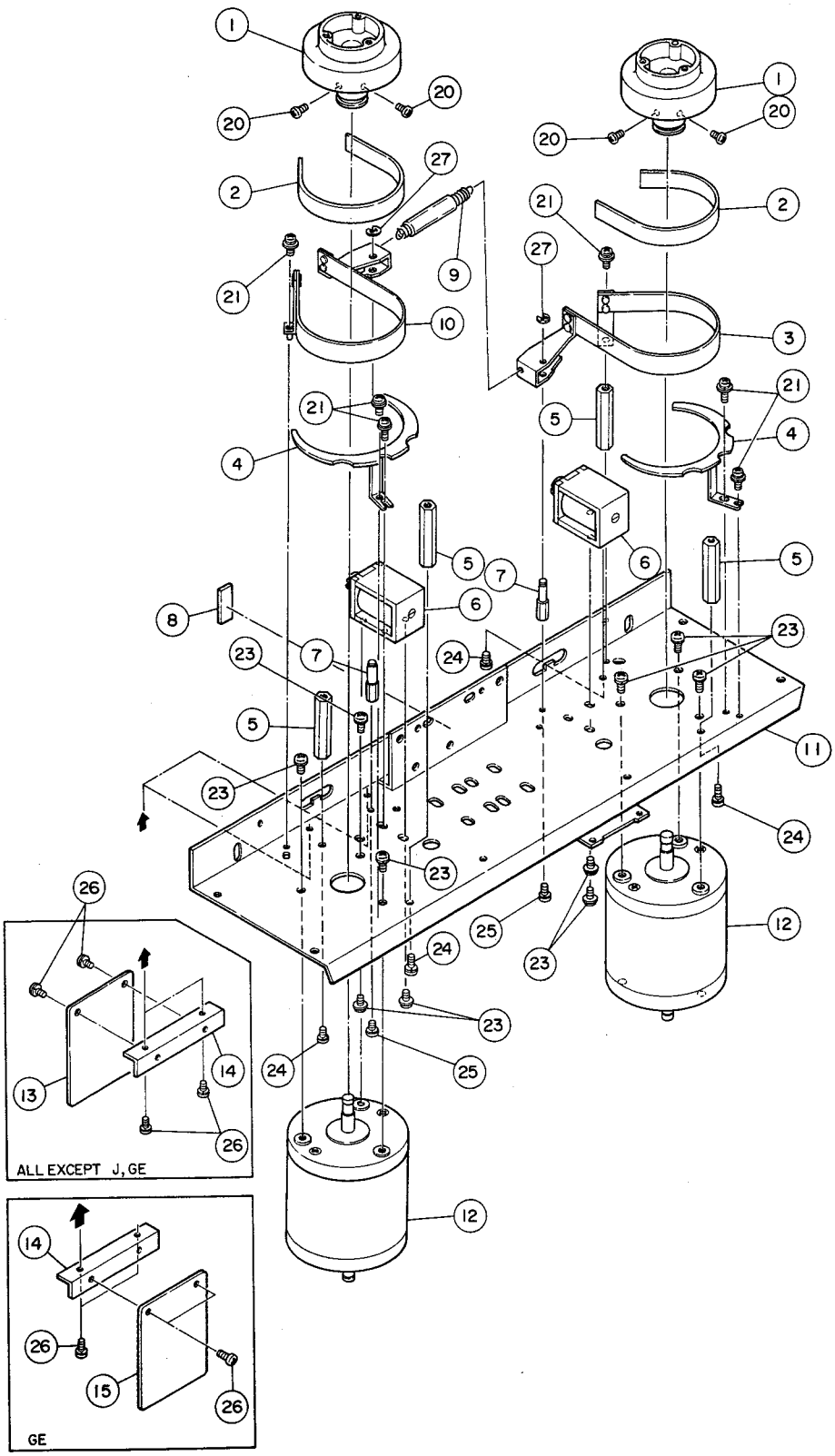

REF. NO.	PART NO.	DESCRIPTION	COMMON MODELS	REMARKS
3 - 1	5800346200	Base, Reel Table; B	X-1000R	
3 - 2	5555274000	Felt, Brake	A-3300SX	
3 - 3	5504736000	Band Assy, Brake; R	X-10R	
3 - 4	*5555685000	Plate, Band Assy	X-10R	
3 - 5	*5544916000	Stay, Top Panel; A	A-6100MkII	
3 - 6	5163044000	Solenoid, Brake		
3 - 7	*5545033000	Shaft, Brake Band	X-10R	
3 - 8	*5534686001	Cushion	X-10R	
3 - 9	*5524294000	Spring, Brake	X-10R	
3 - 10	5504735000	Band Assy, Brake; L	X-10R	
3 - 11	*5503194002	Chassis Assy, Reel Motor	X-10R	
3 - 12	5370004800	DC Motor Assy, Reel	X-7R	
3 - 13	*5200140400	PCB Assy, FUSE [E, UK, A]		
	*5200140500	PCB Assy, FUSE [U, C]		
3 - 14	*5555789000	Bracket, FUSE PCB [All except J]	X-10R	
3 - 15	*5200140600	PCB Assy, VOLTAGE SELECTOR [GE, L]		
3 - 20	*5783564008	Screw, Pan Head C Type M4 x 8		
3 - 21	*5780143006	Screw, Pan Head Sems B M3 x 6		
3 - 22	*5780134010	Screw, Pan Head Sems A M4 x 10		
3 - 23	*5780143006	Screw, Pan Head Sems B M3 x 6		
3 - 24	*5780134008	Screw, Pan Head Sems A M4 x 8		
3 - 25	*5780133008	Screw, Pan Head Sems A M3 x 8		
3 - 26	*5780133006	Screw, Pan Head Sems A M3 x 6		
3 - 27	*5786003000	Ring, E Type $\phi 3$		

Parts marked with *require longer delivery time.

[U] : U.S.A. [C] : CANADA [GE] : GENERAL EXPORT [A] : AUSTRALIA
[E] : EUROPE [UK] : U.K. [L] : LIMITED AREA [J] : JAPAN

EXPLODED VIEW-4

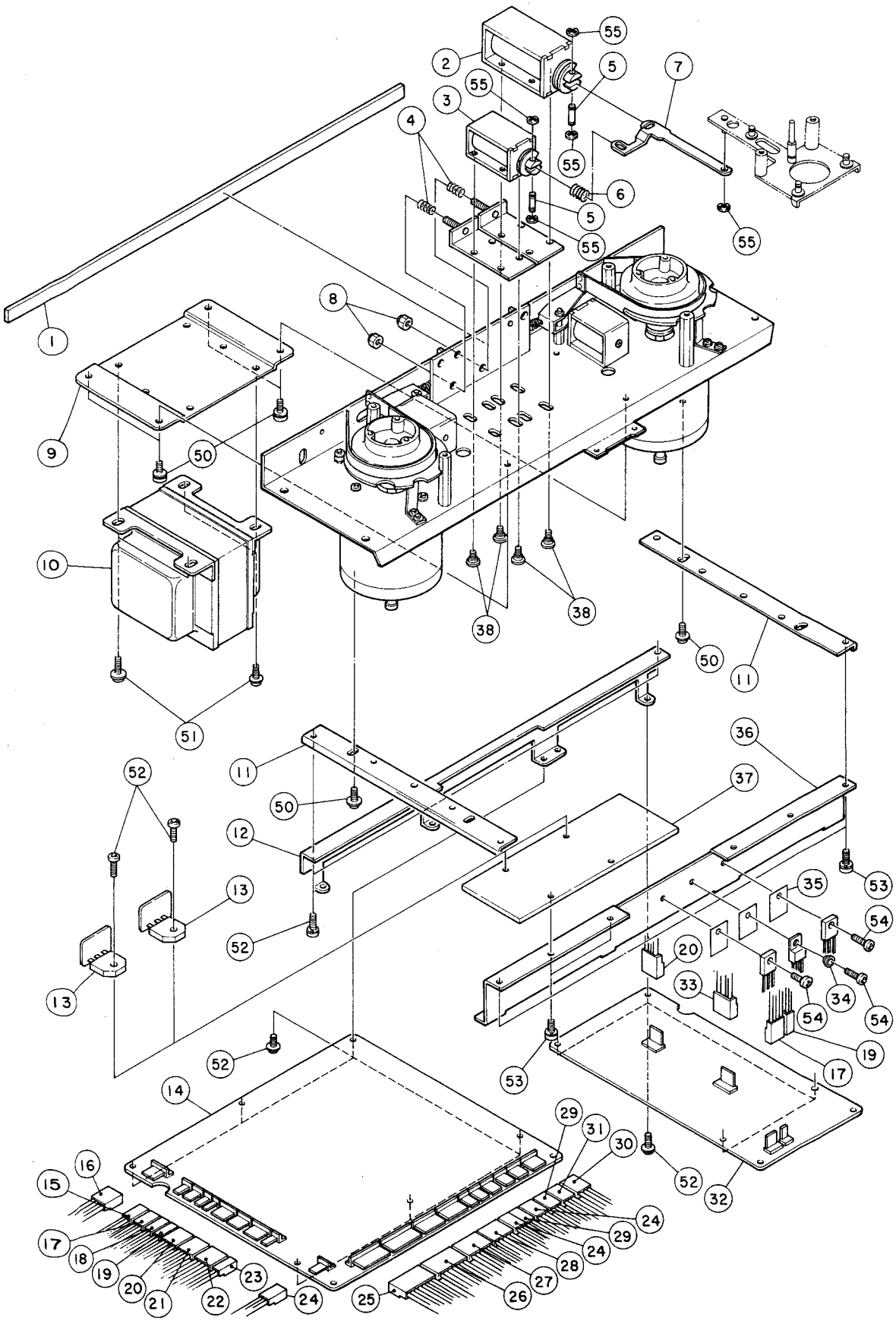

REF. NO.	PARTS NO.	DESCRIPTION	COMMON MODELS	REMARKS
4 - 1	*5555887001	Cushion, Case	X-10R	
4 - 2	5163041001	Solenoid, Pinch Roller		
4 - 3	5163042000	Solenoid, Pause		
4 - 4	*5524218000	Spring, Pressure Regulation	X-10R	
4 - 5	*5545022000	Pin, Solenoid	X-10R	
4 - 6	*5524071000	Spring, Solenoid	AL-700	
4 - 7	*5555668000	Plate, C	X-10R	
4 - 8	*5581066000	Nut, Nylon M4		
4 - 9	*5555681101	Bracket, Power Transformer		
4 - 10	⚠ 5320027300	Transformer, Power [J]		
	⚠ 5320027400	Transformer, Power [U, C]		
	⚠ 5320027500	Transformer, Power [GE, L]		
	⚠ 5320027600	Transformer, Power [E, UK, A, E]		
4 - 11	*5553296001	Frame, Joint	X-10R	
4 - 12	*5800553200	Frame, PCB		
4 - 13	*5200073100	PCB Assy, TRANSISTOR		
4 - 14	*5200135400	PCB Assy, POWER SERVO		
4 - 15	*5122222000	Connector Socket, 3P (BLK)		
4 - 16	*5122167000	Connector Socket, 5P (WHT)		
4 - 17	*5122166000	Connector Socket, 4P (WHT)		
4 - 18	*5122221000	Connector Socket, 2P (BLK)		
4 - 19	*5122280000	Connector Socket, 2P (RED)		
4 - 20	*5122283000	Connector Socket, 5P (RED)		
4 - 21	*5122224000	Connector Socket, 5P (BLK)		
4 - 22	*5122168000	Connector Socket, 6P (WHT)		
4 - 23	*5122164000	Connector Socket, 2P (WHT)		
4 - 24	*5122281000	Connector Socket, 3P (RED)		
4 - 25	*5122172000	Connector Socket, 10P (WHT)		
4 - 26	*5122227000	Connector Socket, 8P (BLK)		
4 - 27	*5122176000	Connector Socket, 14P (WHT)		
4 - 28	*5122287000	Connector Socket, 9P (RED)		
4 - 29	*5122165000	Connector Socket, 3P (WHT)		
4 - 30	*5122168000	Connector Socket, 6P (WHT)		
4 - 31	*5122223000	Connector Socket, 4P (BLK)		
4 - 32	*5200135600	PCB Assy, DBX		
4 - 33	*5122282000	Connector Socket, 4P (WHT)		
4 - 34	*5033295000	Tube, Insulating		
4 - 35	*5033291000	Plate, Insulating		
4 - 36	*5800553300	Frame, HS		
4 - 37	*5800553800	Heat Sink		
4 - 38	*5800022600	Screw, Shoulder; G	X-10R	
4 - 39	*5504732000	Plate Assy, Solenoid	X-10R	
4 - 50	*5780134008	Screw, Pan Head Sems A M4 x 8		
4 - 51	*5780144008	Screw, Pan Head Sems B M4 x 8		
4 - 52	*5780143006	Screw, Pan Head Sems B M3 x 6		
4 - 53	*5780133006	Screw, Pan Head Sems A M3 x 6		
4 - 54	*5780003006	Screw, Pan Head M3 x 6		
4 - 55	*5786003000	Ring, E Type $\phi 3$		

Parts marked with *require longer delivery time.

[U] : U.S.A. [C] : CANADA [GE] : GENERAL EXPORT [A] : AUSTRALIA
[E] : EUROPE [UK] : U.K. [L] : LIMITED AREA [J] : JAPAN

EXPLODED VIEW-5

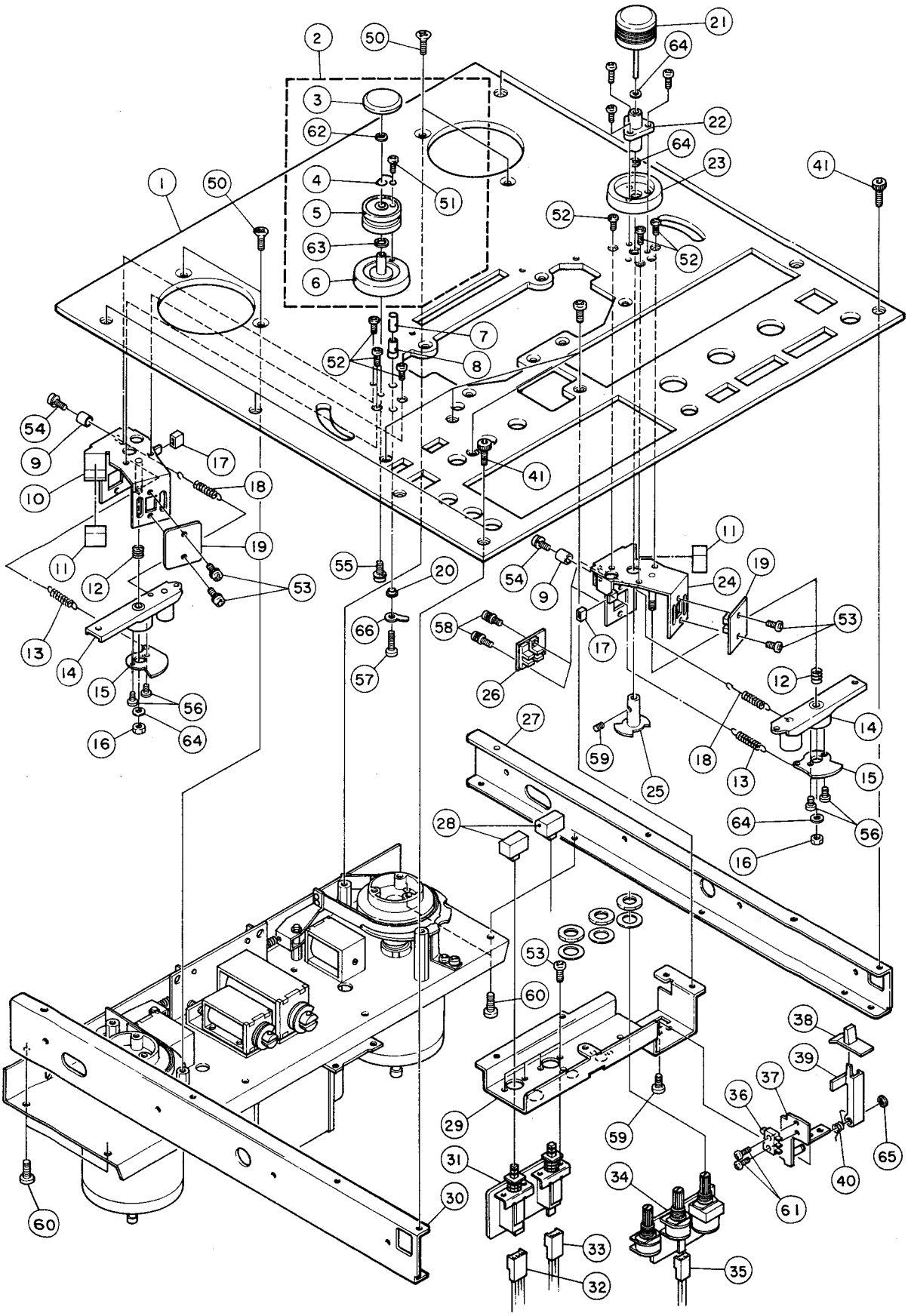

REF. NO.	PARTS NO.	DESCRIPTION	COMMON MODELS	REMARKS
5 - 1	*5800543700	Panel, Deck; S (X-2000R)		
	*5800543600	Panel, Deck; B (X-2000R BL)		
5 - 2	*5800550900	Roller Assy, S (X-2000R)		
	*5800550800	Roller Assy, B (X-2000R BL)		
5 - 3	5800551100	Cap, Roller; S (X-2000R)		
	5800551000	Cap, Roller; B (X-2000R BL)		
5 - 4	*5524225000	Spring, Earth	X-10R	
5 - 5	5504740004	Roller Assy; A	X-10R	
5 - 6	*5800551300	Base Assy, Roller; S (X-2000R)		
	*5800551200	Base Assy, Roller; B (X-2000R BL)		
5 - 7	*5800551600	Pole, Sensing		
5 - 8	*5800551700	Pole, Insulating		
5 - 9	*5800348501	Collar	X-1000R	
5 - 10	*5800269802	Base Assy, Tension Arm; L	X-1000R	
5 - 11	*5534686001	Cushion	X-10R	
5 - 12	*5524069000	Spring, Roller Arm	AL-700	
5 - 13	*5800270801	Spring, Return	X-1000R	
5 - 14	*5800271602	Arm Assy, Tension	X-1000R	
5 - 15	*5800270700	Shautter	X-1000R	
5 - 16	*5581045000	Nut, Nylon		
5 - 17	*5027699000	Collar, Rubber		
5 - 18	*5800270901	Spring, Tension	X-1000R	
5 - 19	5200067402	PCB Assy, TENSION SENSOR		
5 - 20	*5534368100	Washer, Insulating	A-6600	
5 - 21	5800550300	F Roller Assy, S (X-2000R)		
	5800550200	F Roller Assy, B (X-2000R BL)		
5 - 22	5504516000	Holder Assy, Metal		
5 - 23	*5800550700	Base, F Roller; S (X-2000R)		
	*5800550600	Base, F Roller; B (X-2000R BL)		
5 - 24	*5800269902	Base Assy, Tension Arm; R	X-1000R	
5 - 25	*5800271302	Plate Assy, Refrector	X-1000R	
5 - 26	*5200136100	PCB Assy, ROLLER SENSOR		
5 - 27	*5800553000	Angle, Side; R		
5 - 28	5800546800	Button, T/S; S (X-2000R)		
	5800546701	Button, T/S; B (X-2000R BL)		
5 - 29	*5800553400	Chassis, Switch		
5 - 30	*5800553100	Angle, Side; L		
5 - 31	*5200136200	PCB Assy, SPEED SWITCH		
5 - 32	*5122166000	Connector Socket, 4P (WHT)		
5 - 33	*5122281000	Connector Socket, 3P (RED)		
5 - 34	*5200136300	PCB Assy, AUTO REVERSE		
5 - 35	*5122164000	Connector Socket, 2P (WHT)		
5 - 36	5301455500	Switch, Micro; SS5GL13-F		
5 - 37	*5504737000	Bracket Assy, CUE	X-10R	
5 - 38	5800546400	Knob, Cue; S (X-2000R)		
	5800546301	Knob, Cue; B (X-2000R BL)		
5 - 39	*5800401000	Lever, Cue; B	X-1000R	
5 - 40	*5524223001	Spring, Cue	X-10R	
5 - 41	*5800553700	Screw, Cap; S (X-2000R)		
	*5800553600	Screw, Cap; B (X-2000R BL)		
5 - 50	*5780204010	Screw, Flat Countersunk Head M4 x 10		
5 - 51	*5780012004	Screw, Bind Head M2 x 4 (Ni)		
5 - 52	*5780203008	Screw, Flat Countersunk Head M3 x 8		
5 - 53	*5780003008	Screw, Bind Head M3 x 8		
5 - 54	*5780103010	Screw, Pan Head M3 x 10		
5 - 55	*5783083012	Screw, Washer Head Tite M3 x 12		
5 - 56	*5780102005	Screw, Pan Head M2 x 5		
5 - 57	*5780003020	Screw, Bind Head M3 x 20		
5 - 58	*5780133006	Screw, Pan Head Sems A M3 x 6		
5 - 59	*5782213303	Setscrew, Hex Socket (Cup Point) M3 x 3		
5 - 60	*5780134008	Screw, Bind Head M4 x 8 (Ni)		
5 - 61	*5780102010	Screw, Pan Head M2 x 10		
5 - 62	*5785305000	Washer, Flat ϕ5 x ϕ8 x t0.25		
5 - 63	*5785315000	Washer, Flat ϕ5 x ϕ8 x t0.5		
5 - 64	*5785003000	Washer, Flat M3 Type t0.5		
5 - 65	*5786003000	Ring, E Type ϕ3		
5 - 66	*5786700400	Lug, GND ϕ3.2		

Parts marked with *require longer delivery time.

[U] : U.S.A. [C] : CANADA [GE] : GENERAL EXPORT [A] : AUSTRALIA
[E] : EUROPE [UK] : U.K. [L] : LIMITED AREA [J] : JAPAN

EXPLODED VIEW-6

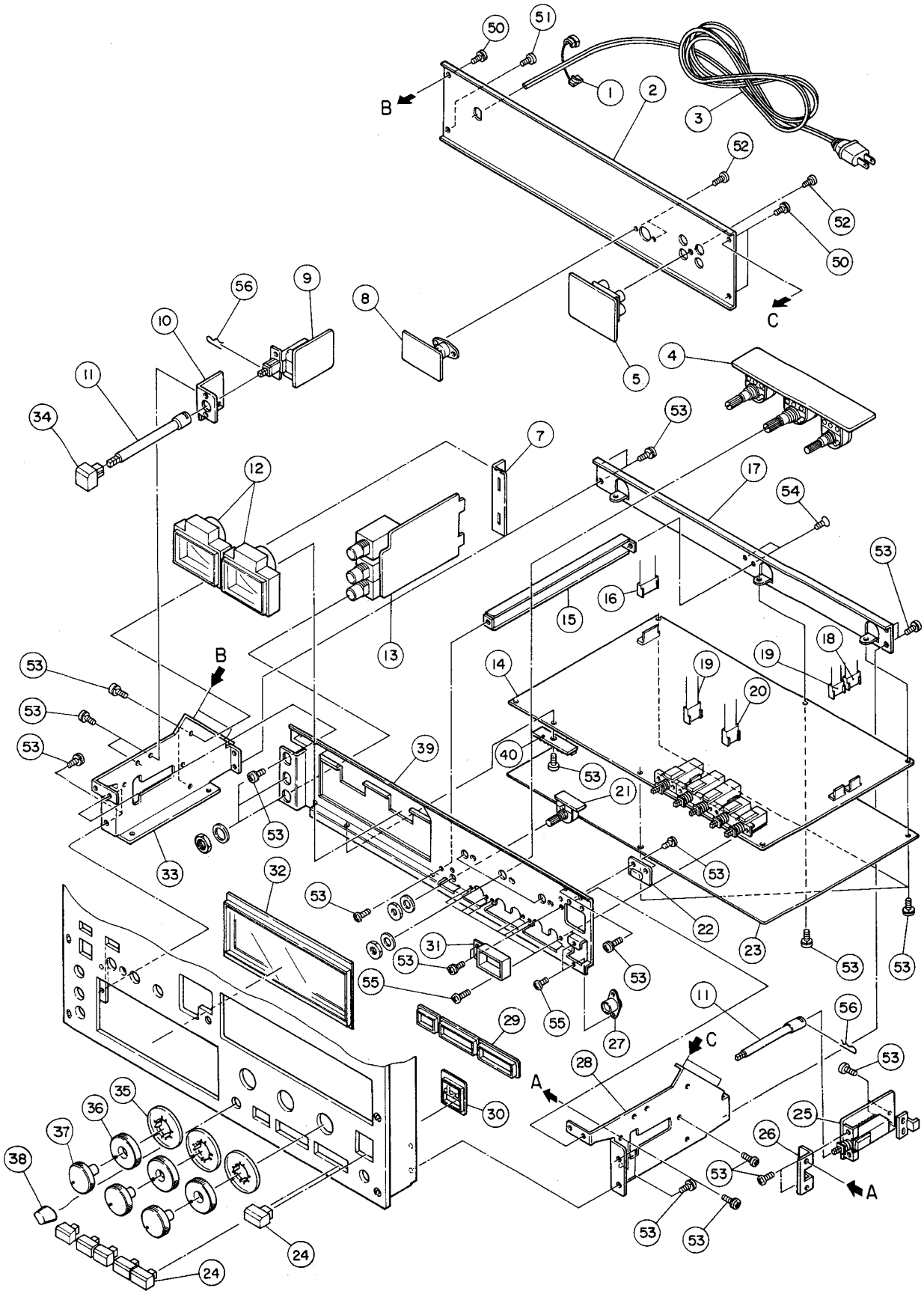

REF. NO.	PARTS NO.	DESCRIPTION	COMMON MODELS	REMARKS
6 - 1	⚠*5534660000	Stram Reliet, AC Power Cord [All except UK]		
	⚠*5317001700	Stram Reliet, AC Power Cord [UK]		
6 - 2	*5800552800	Panel, Rear		
6 - 3	⚠*5128027000	Cord, AC Power [J]		
	⚠*5350010800	Cord, AC Power [U, C, GE, L]		
	⚠*5350008200	Cord, AC Power [E]		
	⚠*5128047000	Cord, AC Power [UK]		
	⚠*5350008300	Cord, AC Power [A]		
6 - 4	*5200135800	PCB Assy, VR		
6 - 5	*5200136400	PCB Assy, IN/OUTPUT		
6 - 6	*5800551800	Chassis Assy, Ampl.		
6 - 7	*5800552400	Angle, PCB		
6 - 8	*5200142300	PCB Assy, DUPLI SYNC		
6 - 9	*5200113100	PCB Assy, POWER SWITCH [J, GE, L]		
	*5200113110	PCB Assy, POWER SWITCH [U]		
	*5200113120	PCB Assy, POWER SWITCH [C]		
	*5200141900	PCB Assy, POWER SWITCH [E, UK, A]		
6 - 10	*5800552500	Bracket, Power Switch		
6 - 11	*5534712000	Lod, B	X-10R	
6 - 12	5296006800	Meter, VU (X-2000R)		
	5296006900	Meter, VU (X-2000R BL)		
6 - 13	*5200135700	PCB Assy, HEAD PHONE		
6 - 14	*5200135501	PCB Assy, REC/PLAY		
6 - 15	*5800552600	Angle, PCB Support		
6 - 16	*5122170000	Connector Socket, 8P (WHT)		
6 - 17	*5800552700	Fram, Ampl. Back		
6 - 18	*5122282000	Connector Socket, 4P (RED)		
6 - 19	*5122166000	Connector Socket, 4P (WHT)		
6 - 20	*5122223000	Connector Socket, 4P (BLK)		
6 - 21	*5200136500	PCB Assy, BIAS VR		
6 - 22	*5200136600	PCB Assy, DBX LAMP		
6 - 23	*5800552900	Plate, Shield		
6 - 24	5800547800	Button, Ampl; S (X-2000R)		
	5800547701	Button, Ampl; B (X-2000R BL)		
6 - 25	*5200136700	PCB Assy, DBX SWITCH		
6 - 26	*5800552300	Bracket, Switch		
6 - 27	*5334027500	Connector Socket, 4P		
6 - 28	*5800552201	Frame, Ampl; R		
6 - 29	*5800548500	Escutcheon, Button; S (X-2000R)		
	*5800548400	Escutcheon, Button; B (X-2000R BL)		
6 - 30	*5800547200	Lens Assy, DBX; S (X-2000R)		
	*5800547100	Lens Assy, DBX; B (X-2000R BL)		
6 - 31	*5800556400	Hood, Lamp		
6 - 32	*5800548700	Escutcheon Assy, Meter; S (X-2000R)		
	*5800548600	Escutchoen Assy, Meter; B (X-2000R BL)		
6 - 33	*5800552101	Frame, Ampl; L		
6 - 34	5800547000	Button, Power		
6 - 35	5800548300	Knob, Maker		
6 - 36	5800548200	Knob, Lower; S (X-2000R)		
	5800548100	Knob, Lower; B (X-2000R BL)		
6 - 37	5800548000	Knob, Upper; S (X-2000R)		
	5800547900	Knob, Upper; B (X-2000R BL)		
6 - 38	5800546600	Knob, Small; S (X-2000R)		
	5800546501	Knob, Small; B (X-2000R BL)		
6 - 39	*5800551800	Chassis Assy, Ampl.		
6 - 40	*5200159700	PCB Assy, BUFFER		
6 - 50	*5780103006	Screw, Pan Head M3 x 6		
6 - 51	*5780163006	Screw, Pan Head Sems C M3 x 6		
6 - 52	*5780013006	Screw, Bind Head M3 x 6 (Ni)		
6 - 53	*5780133006	Screw, Pan Head Sems A M3 x 6		
6 - 54	*5780203006	Screw, Flat Head M3 x 6		
6 - 55	*5780102604	Screw, Pan Head M2.6 x 4		
6 - 56	*5786360500	Pin, R Type Φ5		

Parts marked with *require longer delivery time.

[U] : U.S.A. [C] : CANADA [GE] : GENERAL EXPORT [A] : AUSTRALIA
[E] : EUROPE [UK] : U.K. [L] : LIMITED AREA [J] : JAPAN

5 PC BOARD AND PARTS LIST

基板図とパーツ・リスト

VOLUME PCB A'ssy

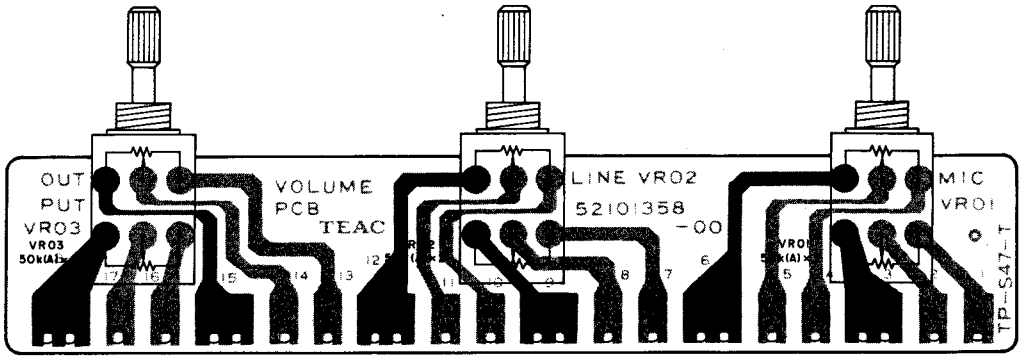

COUNTER PCB A'ssy

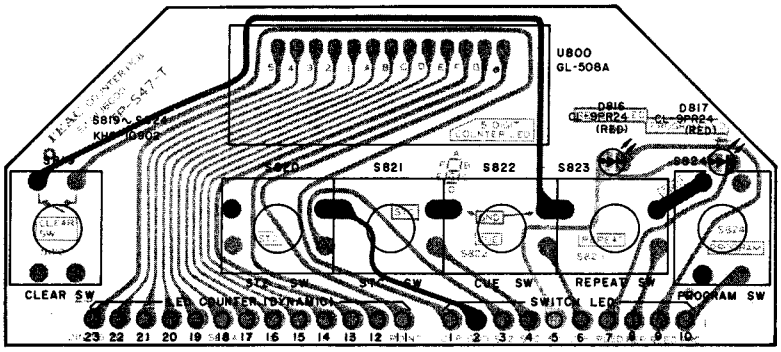

DUPL. SINC. PCB A'ssy

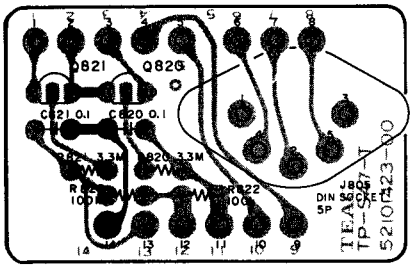

BUFFER AMPL. PCB A'ssy

REC/PLAY AMPL. PCB A'ssy

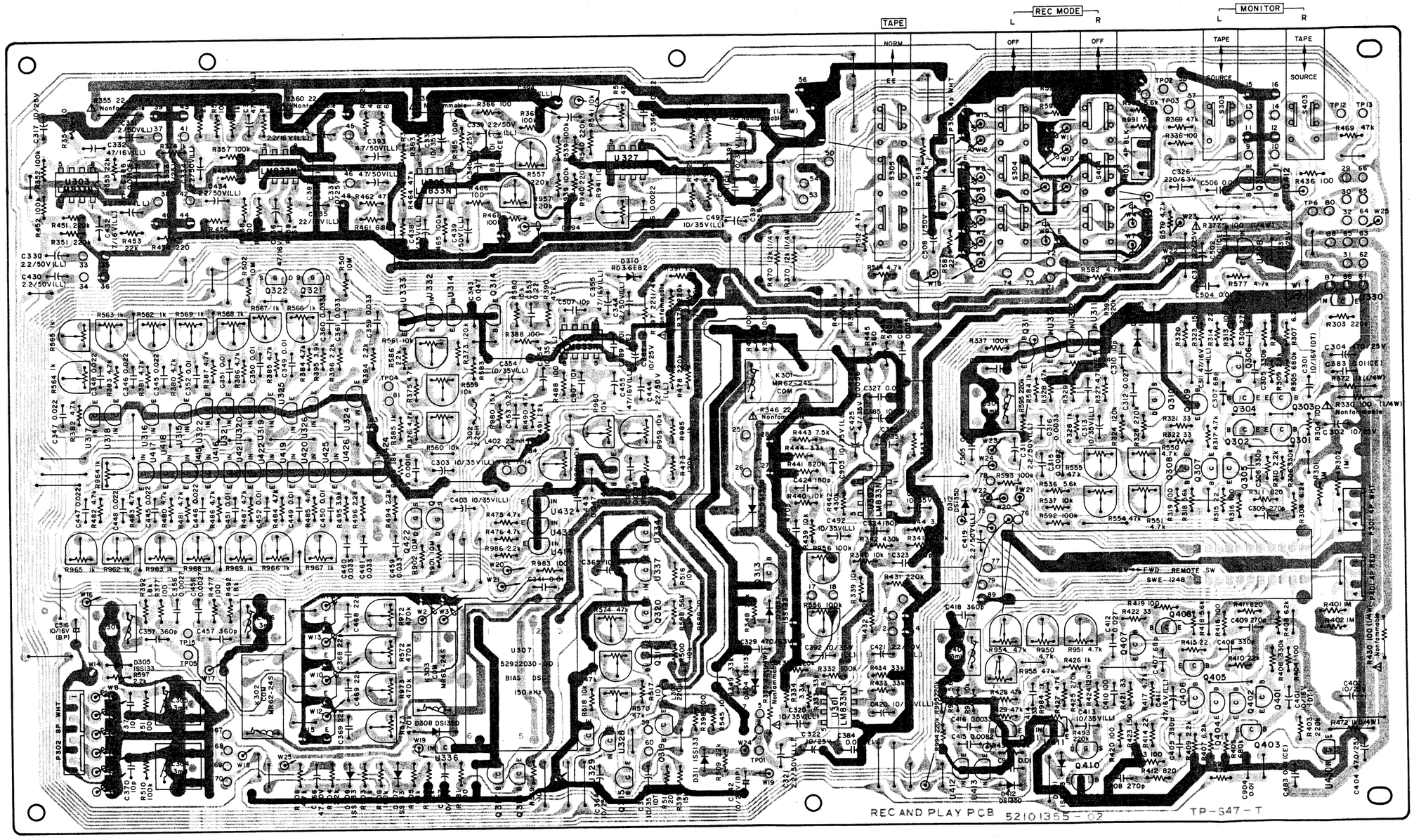

POWER PCB A'ssy

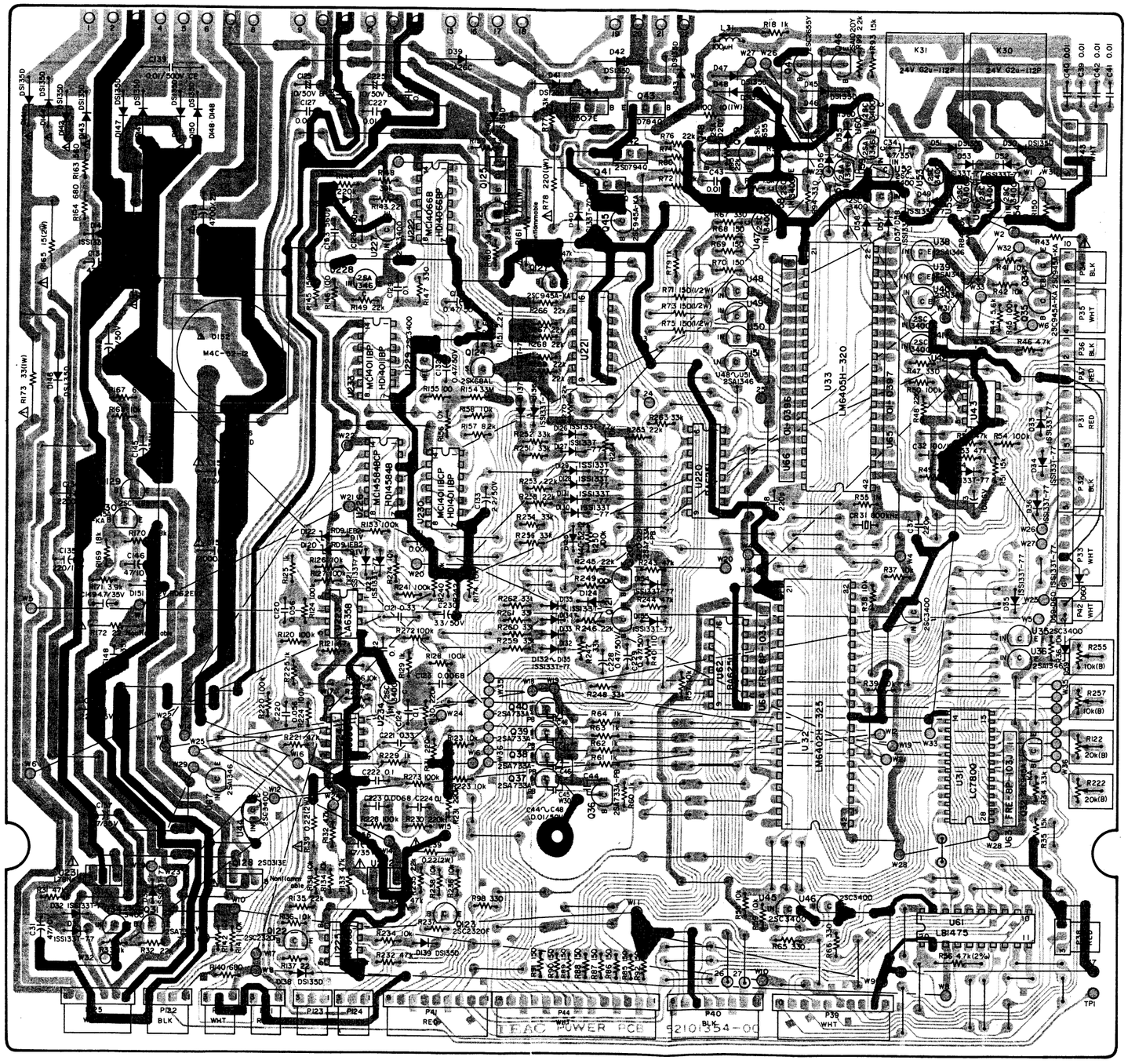

DBX PCB A'ssy

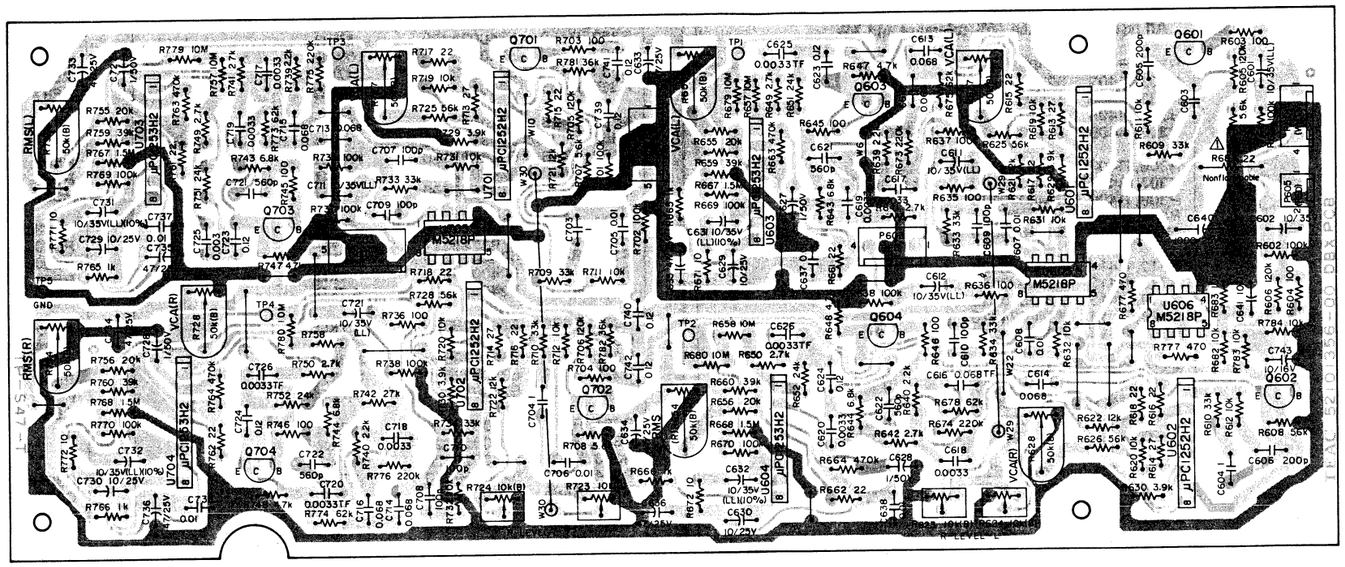

HEADPHONE PCB A'ssy

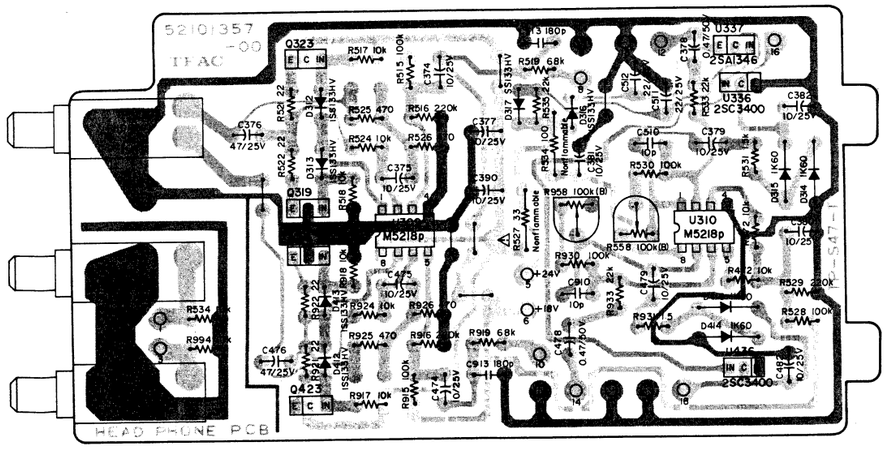

OPERATION PCB A'ssy

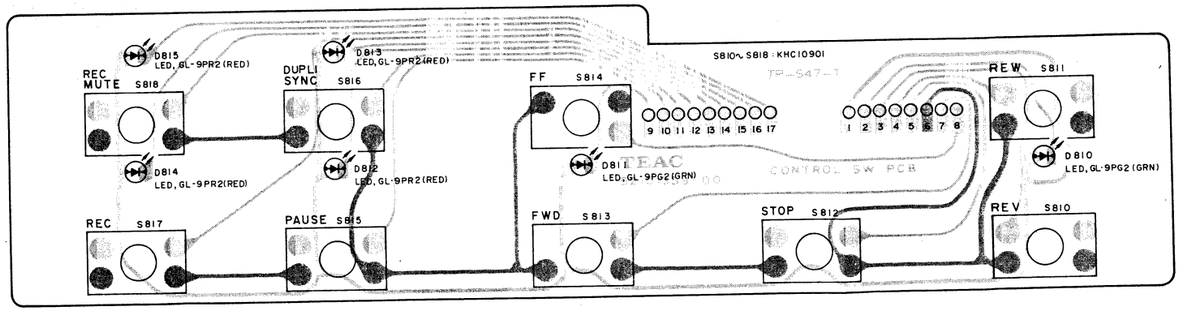

NOTES

1. PC Board shown viewed from foil side.
2. The colors used on the PCB illustrations have the following significance:
   - : +B power supply circuit
   - : GND
   - : Other
3. Resistor values are in ohms (k = 1,000 ohms).
4. All capacitor values are in microfarads

注.

1. 基板図はパターン面が示されています.
2. プリント・パターンは次のように色別されています.
   - ：＋B電源回路
   - ：GND
   - ：その他のパターン
3. 抵抗の単位はΩ. k＝kΩ(1kΩ＝1,000Ω).
4. コンデンサの単位はμF. p＝pF

REC/PLAY AMPL. PCB A'ssy

REF. NO.	PARTS NO.	DESCRIPTON
	*5200135501	PCB Assy
	*5210135503	PCB
	IC's	
U301~U306	5220420800	LM833N
U308	5220413200	NJM78M18A
U311, U411	5232251400	DTC143TF
U312, U412	5232251400	DTC143TF
U313, U413	5232251400	DTC143TF
U314, U414	5232251400	DTC143TF
U315, U415	5232251400	DTC143TF
U316, U416	5232251400	DTC143TF
U317, U417	5232251400	DTC143TF
U318, U418	5232251400	DTC143TF
U319, U419	5232251400	DTC143TF
U320, U420	5232251400	DTC143TF
U321, U421	5232251400	DTC143TF
U322, U422	5232251400	DTC143TF
U324, U424	5232251400	DTC143TF
U325, U425	5232251400	DTC143TF
U326, U426	5232251400	DTC143TF
U327	5220420800	LM833N
U328, U329	5232251400	DTC143TF
U330, U430	5232251400	DTC143TF
U331	5232252020	2SC3400
U332, U432	5232251400	DTC143TF
U333, U433	5232251400	DTC143TF
U334	5232251400	DTC143TF
U336, U337	5232251400	DTC143TF
	TRANSISTORS	
Q301, Q401	5145036000	2SC945L-K
Q302, Q402	5145036000	2SC945L-K
Q303, Q403	5230018700	2SA733A-KB
Q304, Q404	5230018700	2SA733A-KB
Q305, Q405	5230016600	2SA999F
Q306, Q406	5230778300	2SC2320F
Q307, Q407	5230778300	2SC2320F
Q308, Q408	5230778300	2SC2320F
Q309, Q409	5230016600	2SA999F
Q310, Q410	5230007200	FET, 2SK364 BL
Q311, Q411	5145185000	2SD655E
Q312, Q412	5145185000	2SD655E
Q313	5230778300	2SC2320F
Q314, Q414	5145185000	2SD655F
Q315	5230016600	2SA999F
Q316	5231758500	2SD1140
Q317, Q318	5230778800	2SC2320F
Q320	5230778300	2SC2320F
Q321, Q421	5232007200	FET, 2SK364 BL
Q322, Q422	5232007200	FET, 2SK364 BL
Q323	5230016600	2SA999F
	DIODES	
D301, D401	5224015020	1SS133T-77
D302	5224013210	DS135D-FA4
D303, D304	5224015020	1SS133T-77
D306, D307	5224015020	1SS133T-77
D308	5224013210	DS135D-FA4
D310	5224539301	Zener, RD3.6EB2
D311	5224015020	1SS133T-77
D312, D412	5224013210	DS135D-FA4

REF. NO.	PARTS NO.	DESCRIPTION	
	CARBON RESISTORS All resistors are rated ±5% tolerance and ¼W.		
R301, R401	5240035420	1MΩ	
R302, R402	5240035420	1MΩ	
R303, R403	5240033820	220kΩ	
R304, R404	5240025820	100Ω	
R305, R405	5240035020	680kΩ	
R306, R406	5240034220	330kΩ	
R307, R407	5240030120	6.2kΩ	
R308, R408	5240030120	6.2kΩ	
R309, R409	5240029020	2.2kΩ	
R310, R410	5240029020	2.2kΩ	
R311, R411	5240028020	820Ω	
R312, R412	5240028020	820Ω	
R313, R413	5240025820	100Ω	
R314, R414	5240024220	22Ω	
R315, R415	5240024220	22Ω	
R316, R416	5240025820	100Ω	
R317, R417	5240029820	4.7kΩ	
R318, R418	5240030020	5.6kΩ	
R319, R419	5240025820	100Ω	
R320, R420	5240025820	100Ω	
R321, R421	5240024620	33Ω	
R322, R422	5240024620	33Ω	
R323, R423	5240026220	150Ω	
R324, R424	5240033220	120kΩ	
R325, R425	5240034020	270kΩ	
R326, R426	5240028220	1kΩ	
R327, R427	5240029820	4.7kΩ	
R328, R428	5240032220	47kΩ	
R329, R429	5240032220	47kΩ	
R330, R430	⚠5183578000	100Ω	Nonflammable
R331, R431	5240033820	220kΩ	
R332, R432	5240033020	100kΩ	
R333, R433	5240031820	33kΩ	
R334, R434	5240029420	3.3kΩ	
R335	⚠5183562000	22Ω	Nonflammable
R336, R436	5240025820	100Ω	
R337, R437	5240033020	100kΩ	
R339, R439	5240030620	10kΩ	
R340, R440	5240030620	10kΩ	
R341, R441	5240035220	820kΩ	
R342, R442	5240034520	430kΩ	
R343, R443	5240030320	7.5kΩ	
R344, R444	5240029420	3.3kΩ	
R345, R445	5240027620	560Ω	
R346	⚠5183562000	22Ω	Nonflammable
R347, R447	5240025820	100Ω	
R348	5240031420	22kΩ	
R349	5240031820	33kΩ	
R350, R450	5240033020	100kΩ	
R351, R451	5240033820	220kΩ	
R352, R452	5240033020	100kΩ	
R353, R453	5240031420	22kΩ	
R354, R454	5240026620	220Ω	
R355	⚠5183562000	22Ω	Nonflammable
R356, R456	5240033820	220kΩ	
R357, R457	5240033020	100kΩ	
R358, R458	5240028620	1.5kΩ	
R359, R459	5240028220	1kΩ	
R360	⚠5183562000	22Ω	Nonflammable

REF. NO.	PARTS NO.	DESCRIPTION	
R361, R461	5240030220	6.8kΩ	
R362, R462	5240032220	47kΩ	
R363, R463	5240033020	100kΩ	
R364, R464	5240032220	47kΩ	
R365, R465	5240033020	100kΩ	
R366, R466	5240025820	100Ω	
R367	⚠5183562000	22Ω	Nonflammable
R368, R468	5240033020	100kΩ	
R369, R469	5240032220	47kΩ	
R370, R470	5181508000	12kΩ	
R371, R471	5181510000	15kΩ	
R372, R472	5181482000	1kΩ	
R373, R473	5240033220	120kΩ	
R374	5240028220	1kΩ	
R375, R475	5240029820	4.7kΩ	
R376, R476	5240029820	4.7kΩ	
R377	⚠5183578000	100Ω	Nonflammable
R378, R478	5240033820	220kΩ	
R379, R479	5240033020	100kΩ	
R380, R480	5240029820	4.7kΩ	
R381, R481	5240029820	4.7kΩ	
R382, R482	5240029820	4.7kΩ	
R383, R483	5240029820	4.7kΩ	
R384, R484	5240029820	4.7kΩ	
R385, R485	5240029820	4.7kΩ	
R386, R486	5240029820	4.7kΩ	
R387, R487	5240029820	4.7kΩ	
R388, R488	5240025820	100Ω	
R390, R490	5240032220	47kΩ	
R391, R491	5240028420	1.2kΩ	
R392, R492	5240028820	1.8kΩ	
R393, R493	5240033820	220kΩ	
R394, R494	5240029020	2.2kΩ	
R395, R495	5240029620	3.9kΩ	
R396, R496	5240029020	2.2kΩ	
R397	⚠5183562000	22Ω	Nonflammable
R398	5240025820	100Ω	
R399	5240031020	15kΩ	
R500	5240023420	10Ω	
R501, R901	5240177800	10MΩ	
R502, R902	5240177800	10MΩ	
R503	5240028220	1kΩ	
R504	5240029020	2.2kΩ	
R505	5240032620	68kΩ	
R506	5240033020	100kΩ	
R507	5240031420	22kΩ	
R508	5240029820	4.7kΩ	
R509	5240031420	22kΩ	
R510, R511	5240033020	100kΩ	
R512~R514	5240029820	4.7kΩ	
R515	5240031320	20kΩ	
R516~R519	5240030620	10kΩ	
R536, R936	5240030020	5.6kΩ	
R537, R937	5240030620	10kΩ	
R538, R938	5240025820	100Ω	
R539, R939	5240033020	100kΩ	
R540, R940	5240033820	220kΩ	
R541, R941	5240030620	10kΩ	
R542, R942	5240032220	47kΩ	
R543, R943	5240032220	47kΩ	
R544	⚠5183562000	22Ω	Nonflammable
R545	5240025820	100Ω	
R577, R977	5240029820	4.7kΩ	

REF. NO.	PARTS NO.	DESCRIPTION
R578, R978	5240029820	4.7kΩ
R579	5240029820	4.7kΩ
R580, R980	5240031020	15kΩ
R581	5240025820	100Ω
R582	5240029820	4.7kΩ
R583, R983	5240025820	100Ω
R584, R984	5240028220	1kΩ
R585, R985	5240028220	1kΩ
R586, R986	5240029020	2.2kΩ
R587	5240031420	22kΩ
R588	5240032420	56kΩ
R589	5240030620	10kΩ
R590, R990	5240030020	5.6kΩ
R591, R991	5240030020	5.6kΩ
R592	5240033020	100kΩ
R593	5240033020	100kΩ
R594, R994	5240033820	220kΩ
R595, R995	5240033820	220kΩ
R596, R996	5240031220	18kΩ
R597	5240029020	2.2kΩ
R598	5240033020	100kΩ
	CAPACITORS	
C301, C401	5054656100	Dip Tantalum 10μF 16V
C302, C402	5260162650	Elec. 10μF 25V
C303, C403	5260222050	Elec. 10μF 35V
C304, C404	5173073000	Elec. 470μF 25V
C305, C405	5263106620	Polyst. 330pF 100V
C306, C406	5263106620	Polyst. 330pF 100V
C307, C407	5170006000	Dip Myca 68pF 50V
C308, C408	5263106420	Polyst. 270pF 100V
C309, C409	5263106420	Polyst. 270pF 100V
C310, C410	5054740000	Dip Myca 10pF 50V
C311, C411	5260223150	Elec. 47μF 16V
C312, C412	5263167223	Metalized 0.027μF 50V
C313, C413	5260222050	Elec. 10μF 35V
C314, C414	5263167323	Metalized 0.033μF 50V
C315, C415	5263102720	Polyst. 8200pF 100V
C316, C416	5263101720	Polyst. 3300pF 100V
C317	5260162650	Elec. 10μF 25V
C318, C418	5263106720	Polyst. 360pF 100V
C319, C419	5260221350	Elec. 2.2μF 50V
C320, C420	5260222050	Elec. 10μF 35V
C321, C421	5260221350	Elec. 2.2μF 50V
C322	5260162650	Elec. 10μF 25V
C323, C423	5263107020	Polyst. 470pF 100V
C324, C424	5263106020	Polyst. 180pF 100V
C325, C425	5260162050	Elec. 4.7μF 35V
C326	5260166752	Elec. 220μF 6.3V
C327	5173433000	Ceramic 0.01μF 50V
C328, C428	5263166423	Metalized 5600pF 50V
C329	5173070000	Elec. 470μF 6.3V
C330, C430	5260221350	Elec. 2.2μF 50V
C331, C431	5260221350	Elec. 2.2μF 50V
C332, C432	5260223150	Elec. 47μF 16V
C333	5260162650	Elec. 10μF 25V
C334, C434	5260221350	Elec. 2.2μF 50V
C335, C435	5260222650	Elec. 22μF 16V
C336, C436	5260223150	Elec. 47μF 16V
C337	5260162650	Elec. 10μF 25V
C338, C438	5260222050	Elec. 10μF 35V
C339, C439	5260221350	Elec. 2.2μF 50V
C340	5260162650	Elec. 10μF 25V

Parts marked with *require longer delivery time. [U] : U.S.A. [E] : EUROPE [C] : CANADA [UK] : U.K. [GE] : GENERAL EXPORT [L] : LIMITED AREA [A] : AUSTRALIA [J] : JAPAN

Parts marked with *require longer delivery time. [U] : U.S.A. [E] : EUROPE [C] : CANADA [UK] : U.K. [GE] : GENERAL EXPORT [L] : LIMITED AREA [A] : AUSTRALIA [J] : JAPAN

REF. NO.	PARTS NO.	DESCRIPTION		
C341	5171856000	Mylar	0.01μF	100V
C342	5260067150	Elec.	10μF	25V
C343, C443	5263167523	Metalized	0.047μF	50V
C344, C444	5260221350	Elec.	2.2μF	50V
C345, C445	5263167123	Metalized	0.022μF	50V
C346, C446	5263167123	Metalized	0.022μF	50V
C347, C447	5263167123	Metalized	0.022μF	50V
C348, C448	5263167123	Metalized	0.022μF	50V
C349, C449	5171856000	Mylar	0.01μF	100V
C350, C450	5171856000	Mylar	0.01μF	100V
C351, C451	5171856000	Mylar	0.01μF	100V
C352, C452	5171856000	Mylar	0.01μF	100V
C353, C453	5263168323	Metalized	0.22μF	50V
C354, C454	5260222050	Elec.	10μF	35V
C355, C455	5260223150	Elec.	47μF	16V
C356, C456	5263101520	Polyst.	2700pF	100V
C357, C457	5263106720	Polyst.	360pF	100V
C359, C459	5263167323	Metalized	0.033μF	50V
C360, C460	5263167323	Metalized	0.033μF	50V
C361, C461	5263167323	Metalized	0.033μF	50V
C362	5260162650	Elec.	10μF	25V
C363	5266013400	Dip Tantalum	10μF	35V
C364, C365	5260162650	Elec.	10μF	25V
C366	5260165052	Elec.	47μF	10V
C367	5260162550	Elec.	10μF	16V
C368, C468	5172204000	Ceramic	22pF	50V
C369, C469	5172204000	Ceramic	22pF	50V
C370, C371	5054740000	Dip Mica	10pF	50V
C372, C373	5260163452	Elec.	22μF	25V
C383, C483	5173433000	Ceramic	0.01μF	50V
C384	5173433000	Ceramic	0.01μF	50V
C385	5260162650	Elec.	10μF	25V
C386~C389	5173433000	Ceramic	0.01μF	50V
C392, C492	5260222050	Elec.	10μF	35V
C393, C493	5260221550	Elec.	4.7μF	35V
C394, C494	5260221350	Elec.	2.2μF	50V
C396, C496	5263101320	Polsyt.	2200pF	100V
C397, C497	5260222050	Elec.	10μF	35V
C398	5260162650	Elec.	10μF	25V
C399	5173433000	Ceramic	0.01μF	50V
C502	5173433000	Ceramic	0.01μF	50V
C503, C903	5260222050	Elec.	10μF	35V
C504, C904	5263166723	Metalized	0.01μF	50V
C505, C905	5263166723	Metalized	0.01μF	50V
C506	5263166723	Metalized	0.01μF	50V
C507, C907	5054740000	Dip Myca	10pF	50V
C508	5260160750	Elec.	1μF	50V
C509, C909	5263101120	Polyst.	1800pF	100V
C510	5260067050	Elec.	10μF	16V
	VARIABLE RESISTORS			
R550, R950	5280021100	Semi-fixed	4.7kΩ(B)	
R551, R951	5280021100	Semi-fixed	4.7kΩ(B)	
R554, R954	5280021700	Semi-fixed	47kΩ(B)	
R555, R955	5280021700	Semi-fixed	47kΩ(B)	
R556, R956	5280021900	Semi-fixed	100kΩ(B)	
R557, R957	5280022100	Semi-fixed	220kΩ(B)	
R559, R959	5280021300	Semi-fixed	10kΩ(B)	
R560, R960	5280021300	Semi-fixed	10kΩ(B)	
R561, R961	5280021300	Semi-fixed	10kΩ(B)	
R562, R962	5280020700	Semi-fixed	1kΩ(B)	

REF. NO.	PARTS NO.	DESCRIPTION	
R563, R963	5280020700	Semi-fixed	1kΩ(B)
R564, R964	5280020700	Semi-fixed	1kΩ(B)
R565, R965	5280020700	Semi-fixed	1kΩ(B)
R566, R966	5280020700	Semi-fixed	1kΩ(B)
R567, R967	5280020700	Semi-fixed	1kΩ(B)
R568, R968	5280020700	Semi-fixed	1kΩ(B)
R569, R969	5280020700	Semi-fixed	1kΩ(B)
R570, R571	5280021700	Semi-fixed	47kΩ(B)
R572, R972	5280022300	Semi-fixed	470kΩ(B)
R573, R973	5280022300	Semi-fixed	470kΩ(B)
R574	5280021700	Semi-fixed	47kΩ(B)
R576, R976	5280021700	Semi-fixed	47kΩ(B)
	COILS		
L301, L401	5056659000	Trap, 3mH	
L302, L402	5286007300	Choke, 2.2mH	
L303	5286020200	Choke, 220μH	
L304, L305	5056658100	Dummy, 3mH	
L306, L406	5056659000	Trap, 3mH	
	CONNECTOR PLUGS		
P301	5122128000	4P (WHT)	
P302	5122132000	8P (WHT)	
P303	5122128000	4P (WHT)	
P401	5122301000	4P (RED)	
P403	5122185000	4P (BLK)	
	MISCELLANEOUS		
U307	5292203000	OSC Unit	
K301~K303	5290010400	Relay 24V MR62-24S	
S301	5302102500	Remote, Switch Ni SWE1248	
S303, S403	5300035700	Push Switch, 2-2	
S304, S404	5300035800	Push Switch, 6-6	
S305	5300035900	Push Switch, 6-6	

Parts marked with *require longer delivery time.

[U] : U.S.A. [C] : CANADA [GE] : GENERAL EXPORT [A] : AUSTRALIA
[E] : EUROPE [UK] : U.K. [L] : LIMITED AREA [J] : JAPAN

POWER PCB A'ssy

REF. NO.	PARTS NO.	DESCRIPTION
	*5200135400	PCB Assy
	*5210135401	PCB
	IC's	
U31	5220019700	LC7800
U32	5220804900	6402H-325
U33	5220805000	6405H-320
U34, U35	5232252020	2SC3400
U36	5232251620	2SA1346
U37	5232252020	2SC3400
U38~U40	5232251620	2SA1346
U41, U42	5232252020	2SC3400
U43	5220419500	LA6358
U44~U47	5232252020	2SC3400
U48~U51	5232251620	2SA1346
U52~U56	5232252020	2SC3400
U57	5232251620	2SA1346
U58	5232252020	2SC3400
U59	5232251620	2SA1346
U60	5232252020	2SC3400
U61	5220020500	LB1475
U62	5232250900	BA6251
U63, U64	5242111700	10k x 8, FRE 8P
U65	5293002700	01-0397
U66	5293002600	01-0396
U67	5232251620	2SA1346
U68	5232252020	2SC3400
U220, U221	5232250900	BA6251
U222	6048968000	MC14066B
U223~U225	5220419500	LA6358
U226	5220021900	MC14584BCP
U227	5232252020	2SC3400
U228	5232251620	2SA1346
U229	5232252020	2SC3400
U230	6048932000	MC14011BCP
U231	⚠5220418900	L78N05
U232	⚠5220420900	L78N15
U233	6048932000	MC14011BCP
U234	5232252020	2SC3400
	TRANSISTORS	
Q31	5230017920	2SA733A PB
Q32	5230779720	2SC945A KA
Q34, Q35	5230779720	2SC945A KA
Q36~Q40	5230017920	2SA733A PB
Q41~Q43	5231755400	2SD794Q
Q44	5145129000	2SB507E
Q45	5230779720	2SC945A KA
Q46	5230014000	2SA1020Y
Q47	5230773800	2SC2655Y
Q48	5230014000	2SA1020Y
Q49	5230773800	2SC2655Y
Q120, Q121	5230017920	2SA733A PB
Q122, Q123	5230778320	2SC2320F
Q124	5145102000	FET, 2SK68AL
Q125	5145129000	2SB507E
Q126	5145150000	2SA1015GR
Q127	5230779720	2SC945A KA
Q128	5145087000	2SD313E
Q129	5042625000	2SC1318S
Q130	5230779720	2SC945A KA

REF. NO.	PARTS NO.	DESCRIPTION
	DIODES	
D31~D37	5224015020	1SS133T-77
D39	5224013000	DSA26C
D40	5224015020	1SS133T-77
D41~D43	5224013210	DS135D FA4
D44	5224015020	1SS133T-77
D45~D48	5224013210	DS135D FA4
D49	5224015020	1SS133T-77
D50, D51	5224013210	DS135D FA4
D52, D53	5224015020	1SS133T-77
D55~D58	5224015020	1SS133T-77
D59, D60	5224015020	1SS133T-77
D120	5224542101	Zener, RD9.1EB2
D121	5224015020	1SS133T-77
D122	5224542101	Zener, RD9.1EB2
D123~D137	5224015020	1SS133T-77
D138~D140	5224013200	DS135D
D141~D144	⚠5224013210	DS135D FA4
D145	5224015020	1SS133T-77
D146~D150	⚠5224013210	DS135D FA4
D151	5224540901	Zener, RD6.2EB2
D152	⚠5228009800	M4C-52-12
D153~D155	5224015020	1SS133T-77
D156	⚠5224013210	DS135D FA4

CARBON RESISTORS
All resistors are rated ±5% tolerance, ¼W and of carbon type unless otherwise noted.

R31	5240032220	47kΩ	
R32	5240031420	22kΩ	
R33	5240028220	1kΩ	
R34	5240031820	33kΩ	
R35	5240031020	15kΩ	
R36~R39	5240030620	10kΩ	
R40	5240026620	220Ω	
R41, R42	5240030620	10kΩ	
R43	⚠5183554000	10Ω	Nonflammable
R44	5240030020	5.6kΩ	
R45	5240033020	100kΩ	
R46	5240029820	4.7kΩ	
R47	5240027020	330Ω	
R48	5240031420	22kΩ	
R49	5240032220	47kΩ	
R50	5240033020	100kΩ	
R51	5240031020	15kΩ	
R52, R53	5240032220	47kΩ	
R54	5240033020	100kΩ	
R55	5240035420	1MΩ	
R56	5184948000	4.7kΩ	10%
R57~R59	5240030620	10kΩ	
R60~R64	5240028220	1kΩ	
R65~R67	5240027020	330Ω	
R68~R70	5240026220	150Ω	
R71	5180062000	150Ω	
R72	5240031420	22kΩ	
R73	5180062000	150Ω	
R74	5240031420	22kΩ	
R75	5180062000	150Ω	
R76	5240031420	22kΩ	
R77	5240029420	3.3kΩ	
R78	⚠5184594000	220Ω	1W Nonflammable
R79	5240028220	1kΩ	
R80	5240032220	47kΩ	
R81	5240028220	1kΩ	

Parts marked with *require longer delivery time.

[U] : U.S.A. [C] : CANADA [GE] : GENERAL EXPORT [A] : AUSTRALIA
[E] : EUROPE [UK] : U.K. [L] : LIMITED AREA [J] : JAPAN

REF. NO.	PARTS NO.	DESCRIPTION	
R84	5240030620	10kΩ	
R85~R92	5240026220	150Ω	
R93	5240028620	1.5kΩ	
R94	5240027020	330Ω	
R95	5240031420	22kΩ	
R96	5240028620	1.5kΩ	
R97, R98	5240027020	330Ω	
R99	5240031420	22kΩ	
R100	⚠5241230000	10Ω	1W Nonflammable
R120, R220	5240033020	100kΩ	
R121, R221	5240032220	47kΩ	
R123, R223	5240030620	10kΩ	
R124, R224	5240033020	100kΩ	
R125, R225	5240028220	1kΩ	
R126, R226	5240030620	10kΩ	
R127, R227	5240033020	100kΩ	
R128, R228	5240033020	100kΩ	
R129, R229	5240028220	1kΩ	
R130, R230	5240033820	220kΩ	
R131, R231	5240033820	220kΩ	
R132, R232	5240032220	47kΩ	
R133, R233	5240032220	47kΩ	
R134, R234	5240030620	10kΩ	
R135, R235	5240031420	22kΩ	
R136, R236	5240030620	10kΩ	
R137, R237	5240024220	22Ω	
R138, R238	5240030620	10kΩ	
R139, R239	⚠5185190000	0.22Ω	2W, Metal Film
R140	5240027820	680Ω	
R141, R142	5240030620	10kΩ	
R143	5240031420	22kΩ	
R144	5240033820	220kΩ	
R145	5240033420	150kΩ	
R146	5240025820	100Ω	
R147	5240027020	330Ω	
R148	5240032020	39kΩ	
R149	5240031420	22kΩ	
R151	5240029020	2.2kΩ	
R152	5240027820	680Ω	
R153	5240033020	100kΩ	
R154	5240176600	3.3Ω	
R155	5240025820	100Ω	
R156	5240030620	10kΩ	
R157	5240030420	8.2kΩ	
R158	5240030620	10kΩ	
R159, R160	5240029420	3.3kΩ	
R161	⚠5241206600	4.7kΩ	1W Nonflammable
R162	5240032220	47kΩ	
R163	5240027620	560Ω	
R164	5240027820	680Ω	
R165	⚠5241240400	15Ω	2W Nonflammable
R166	⚠5184550000	1Ω	2W Nonflammable
R167	5240030220	6.8kΩ	
R168	5240030620	10kΩ	
R169	5240031220	18kΩ	
R170	5240030220	6.8kΩ	
R171	5240029620	3.9kΩ	
R172	⚠5183562000	22Ω	Nonflammable
R173	⚠5241231200	33Ω	1W Nonflammable
R174	5240030620	10kΩ	
R240, R241	5240033020	100kΩ	
R242	5240035420	1MΩ	
R243, R244	5240032220	47kΩ	
R245, R246	5240031420	22kΩ	
R247, R248	5240031820	33kΩ	

REF. NO.	PARTS NO.	DESCRIPTION	
R249, R250	5240033020	100kΩ	
R251, R252	5240031820	33kΩ	
R253	5240031420	22kΩ	
R254	5240031820	33kΩ	
R256	5240031820	33kΩ	
R258	5240031420	22kΩ	
R259~R263	5240031820	33kΩ	
R264	5240030620	10kΩ	
R265~R271	5240031420	22kΩ	
R272, R273	5240033020	100kΩ	
R274	5240030620	10kΩ	

CAPACITORS

C31	5260165052	Elec.	47μF	10V
C32	5260165952	Elec.	100μF	10V
C33	5260162550	Elec.	10μF	16V
C34	5260162050	Elec.	4.7μF	35V
C37, C38	5263106220	Polyst.	220μF	100V
C39~C43	5173433000	Ceramic	0.01μF	50V
C44~C48	5173433000	Ceramic	0.01μF	50V
C120, C220	5263167623	Metalized	0.056μF	50V
C121, C221	5263168523	Metalized	0.33μF	50V
C122, C222	5263167923	Metalized	0.1μF	50V
C123, C223	5263166523	Metalized	6800pF	50V
C124, C224	5263167923	Metalized	0.1μF	50V
C125, C225	5260067350	Elec.	10μF	50V
C126, C226	5173433000	Ceramic	0.01μF	50V
C127, C227	5173433000	Ceramic	0.01μF	50V
C128	5263107220	Polyst.	560pF	100V
C129	5263167923	Metalized	0.1μF	50V
C130	5260160550	Elec.	0.47μF	50V
C131	5263165723	Metalized	1500pF	50V
C132	5260160550	Elec.	0.47μF	50V
C133	5260161150	Elec.	2.2μF	50V
C134	5260165052	Elec.	47μF	10V
C135	5173054800	Elec.	220μF	16V
C136	⚠5173088000	Elec.	2200μF	16V
C139	5267010300	Ceramic	0.01μF	500V
C142	⚠5262009000	Elec.	2200μF	50V
C145	5260163552	Elec.	22μF	35V
C146	5260165052	Elec.	47μF	10V
C147, C148	5173056800	Elec.	220μF	35V
C149	5260162050	Elec.	4.7μF	35V
C151	⚠5262009000	Ceramic	2200μF	50V
C153	5263107220	Polyst.	560pF	100V
C154	⚠5262008900	Elec.	4700μF	25V
C155	⚠5173075000	Elec.	470μF	50V
C156, C157	5260162050	Elec.	4.7μF	50V
C158	5173048800	Ceramic	100μF	50V
C228, C229	5260160550	Elec.	0.47μF	50V
C230	5260161550	Elec.	3.3μF	50V

VARIABLE RESISTORS

R122, R222	5280132302	Semi-fixed	20kΩ(B)
R150	5150156000	Semi-fixed	50kΩ(B)
R255	5150154000	Semi-fixed	10kΩ(B)
R257	5150154000	Semi-fixed	10kΩ(B)

CONNECTOR PLUGS

P31	5122456000	5P (RED)
P32	5122205000	6P (BLK)
P33	5122149000	6P (WHT)
P34	5122203000	3P (BLK)
P35	5122147000	4P (WHT)

Parts marked with *require longer delivery time.

[U] : U.S.A. [C] : CANADA [GE] : GENERAL EXPORT [A] : AUSTRALIA
[E] : EUROPE [UK] : U.K. [L] : LIMITED AREA [J] : JAPAN

REF. NO.	PARTS NO.	DESCRIPTION
P36	5122202000	2P (BLK)
P37	5122453000	2P (RED)
P38	5122454000	3P (RED)
P39	5122153000	10P (WHT)
P40	5122208000	8P (BLK)
P41	5122460000	9P (RED)
P42	5122145000	2P (WHT)
P43	5122148000	5P (WHT)
P44	5122157000	14P (WHT)
P120	5122146000	3P (WHT)
P121	5122454000	3P (RED)
P122	5122204000	4P (BLK)
P123	5122203000	3P (BLK)
P124	5122203000	3P (BLK)
P125	5122149000	6P (WHT)
	MISCELLANEOUS	
K30, K31	5290008500	Relay, 24V G2U-112P
CR31	5347000900	Seramic OSC, KBR-800H
L31	5286016500	Choke Coil, 100mH T-8

DBX PCB A'ssy

REF. NO.	PARTS NO.	DESCRIPTION
	*5200135600	PCB Assy
	*5210135600	PCB
	IC's	
U601, U602	5220414501	μPC1252H-2
U603, U604	5220414601	μPC1253H-2
U605, U606	5220418800	M5218P
U701, U702	5220414501	μPC1252H-2
U703, U704	5220414601	μPC1253H-2
U705	5220418800	M5218P
	TRANSISTORS	
Q601~Q604	5230778300	2SC2320F
Q701~Q704	5230778300	2SC2320F
	CARBON RESISTORS All resistors are rated ±5% tolerance and ¼W.	
R601, R602	5240033020	100kΩ
R603, R604	5240025820	100Ω
R605, R606	5240033220	120kΩ
R607, R608	5240030020	5.6kΩ
R609, R610	5240031820	33kΩ
R611, R612	5240030620	10kΩ
R613, R614	5240024420	27kΩ
R615~R618	5240024220	22kΩ
R619, R620	5240030620	10kΩ
R621, R622	5240030820	12kΩ

REF. NO.	PARTS NO.	DESCRIPTION	
R625, R626	5240032420	56kΩ	
R629, R630	5240029620	3.9kΩ	
R631, R632	5240030620	10kΩ	
R633, R634	5240031820	33kΩ	
R635, R636	5240025820	100Ω	
R637, R638	5240033020	100kΩ	
R639, R640	5240029020	2.2kΩ	
R641, R642	5240029220	2.7kΩ	
R643, R644	5240030220	6.8kΩ	
R645, R646	5240025820	100Ω	
R647, R648	5240029820	4.7kΩ	
R649, R650	5240029220	2.7kΩ	
R651, R652	5240031520	24kΩ	
R655, R656	5240031320	20kΩ	
R657, R658	5240177800	10MΩ	
R659, R660	5240032020	39kΩ	
R661, R662	5240024220	22Ω	
R663, R664	5240034620	470kΩ	
R665, R666	5240028220	1kΩ	
R667, R668	5240175800	1.5MΩ	
R669, R670	5240033020	100kΩ	
R671, R672	5240023420	10Ω	
R673, R674	5240033820	220kΩ	
R575, R676	5240032520	62kΩ	
R677	5240027420	470Ω	
R679, R680	5240177800	10MΩ	
R681	5183562000	22Ω	Nonflammable
R682, R683	5240030620	10kΩ	
R701, R702	5240033020	100kΩ	
R703, R704	5240025820	100Ω	
R705, R706	5240033220	120kΩ	
R707, R708	5240030020	5.6kΩ	
R709, R710	5240031820	33kΩ	
R711, R712	5240030620	10kΩ	
R713, R714	5240024420	27kΩ	
R715~R718	5240024220	22Ω	
R719, R720	5240030620	10kΩ	
R721, R722	5240030820	12kΩ	
R725, R726	5240324200	56kΩ	
R729, R730	5240029620	3.9kΩ	
R731, R732	5240030620	10kΩ	
R733, R734	5240031820	33kΩ	
R735, R736	5240025820	100Ω	
R737, R738	5240033020	100kΩ	
R739, R740	5240029020	2.2kΩ	
R741, R742	5240029220	2.7kΩ	
R743, R744	5240030220	6.8kΩ	
R745, R746	5240025820	100Ω	
R747, R748	5240029820	4.7kΩ	
R749, R750	5240029220	2.7kΩ	
R751, R752	5240031520	24kΩ	
R755, R756	5240031320	20kΩ	
R757, R758	5240177800	10MΩ	
R759, R760	5240032020	39kΩ	
R761, R762	5240024220	22Ω	
R763, R764	5240034620	470kΩ	
R765, R766	5240028220	1kΩ	
R767, R768	5240175800	1.5MΩ	
R769, R770	5240033020	100kΩ	
R771, R772	5240023420	10Ω	
R773, R774	5240032520	62kΩ	
R775, R776	5240033820	220kΩ	
R777	5240027420	470Ω	
R779, R780	5241177800	10MΩ	
R781, R782	5240031920	36kΩ	
R783, R784	5240030620	10kΩ	

Parts marked with *require longer delivery time.

[U] : U.S.A. [C] : CANADA [GE] : GENERAL EXPORT [A] : AUSTRALIA
[E] : EUROPE [UK] : U.K. [L] : LIMITED AREA [J] : JAPAN

REF. NO.	PARTS NO.	DESCRIPTION		
	CAPACITORS			
C601, C602	5260222050	Elec.	10μF	35V
C603, C604	5263169113	Metalized	1μF	50V
C605, C606	5263106120	Polyst.	200pF	100V
C607, C608	5263166723	Metalized	0.01μF	50V
C609, C610	5263105420	Polyst.	100pF	100V
C611, C612	5260222050	Elec.	10μF	35V
C613~C616	5263167723	Metalized	0.068μF	50V
C617~C620	5263166123	Metalized	3300pF	50V
C621, C622	5263107220	Polyst.	560pF	100V
C623, C624	5263168023	Metalized	0.12μF	50V
C625, C626	5263166123	Metalized	3300pF	50V
C627, C628	5260160750	Elec.	1μF	50V
C629, C630	5260162650	Elec.	10μF	25V
C631, C632	5260227010	Elec.	10μF	35V
C633~C636	5260165252	Elec.	47μF	25V
C637, C638	5260166723	Metalized	0.01μF	50V
C640	5173082000	Elec.	1000μF	25V
C641	5260162550	Elec.	10μF	16V
C703, C704	5263169113	Metalized	1μF	50V
C705, C706	5263166723	Metalized	0.01μF	50V
C707~C710	5263105420	Polyst.	100pF	100V
C711, C712	5260222050	Elec.	10μF	35V
C713~C716	5263167723	Metalized	0.068μF	50V
C717~C720	5263166123	Metalized	3300pF	50V
C721, C722	5263107220	Polyst.	560pF	100V
C723, C724	5263168023	Metalized	0.12μF	50V
C725, C726	5263166123	Metalized	3300pF	50V
C727, C728	5260160750	Elec.	1μF	50V
C729, C730	5260162650	Elec.	10μF	25V
C731, C732	5260227010	Elec.	10μF	35V
C733~C736	5260165252	Elec.	47μF	25V
C737, C738	5263166723	Metalized	0.01μF	50V
C739~C742	5263168023	Metalized	0.12μF	50V
C734	5260162550	Elec.	10μF	16V
	VARIABLE RESISTORS			
R623, R624	5150154000	Semi-fixed	10kΩ(B)	
R627, R628	5150094000	Semi-fixed	50kΩ(B)	
R653, R654	5150094000	Semi-fixed	50kΩ(B)	
R723, R724	5150154000	Semi-fixed	10kΩ(B)	
R727, R728	5150094000	Semi-fixed	50kΩ(B)	
R753, R754	5150094000	Semi-fixed	50kΩ(B)	
	CONNECTOR PLUGS			
P601	5122128000	4P (WHT)		
P603	5122301000	4P (RED)		
P605	5122299000	2P (RED)		
P701	5122129000	5P (WHT)		
P703	5122302000	5P (RED)		

HEADPHONE PCB A'ssy

REF. NO.	PARTS NO.	DESCRIPTION		
	*5200135700	PCB Assy		
	*5210135700	PCB		
	IC's			
U309, U310	5220418800	M5218P		
U336, U436	5232252020	2SC3400		
U337	5232251620	2SA1346		
	TRANSISTORS			
Q319, Q419	5230016300	2SA937LNFR		
Q323, Q423	5230780300	2SC2021LNR		
	DIODES			
D312, D412	5224015010	1SS133HV		
D313, D413	5224015010	1SS133HV		
D314, D414	5224015400	1K60		
D315, D415	5224015400	1K60		
D316, D317	5224015010	1SS133HV		
	CARBON REISTORS All resistors are rated ±5% tolerance and ¼W.			
R372, R472	5240030620	10kΩ		
R515, R915	5240033020	100kΩ		
R516, R916	5240033820	220kΩ		
R517, R917	5240030620	10kΩ		
R518, R918	5240030620	10kΩ		
R519, R919	5240032620	68kΩ		
R521, R921	5240024220	22Ω		
R522, R922	5240024220	22Ω		
R524, R924	5240030620	10kΩ		
R525, R925	5240027420	470Ω		
R526, R926	5240027420	470Ω		
R527	⚠ 5183566000	33Ω	Nonflammable	
R528	5240033020	100kΩ		
R529	5240033820	220kΩ		
R530, R930	5240033020	100kΩ		
R531, R931	5240038620	1.5kΩ		
R533, R933	5240031420	22kΩ		
R534	⚠ 5183578000	100Ω	Nonflammable	
R535	5240031420	22kΩ		
R594, R994	5240030620	10kΩ		
	CAPACITORS			
C374, C474	5260212450	Elec.	10μF	25V
C375, C475	5260212450	Elec.	10μF	25V
C376, C476	5260165252	Elec.	47μF	25V
C377	5260212450	Elec.	10μF	25V
C378, C478	5260220950	Elec.	0.47μF	50V
C379, C479	5260212450	Elec.	10μF	25V
C380, C381	5260212450	Elec.	10μF	25V
C382, C482	5260212450	Elec.	10μF	25V
C390	5260212450	Elec.	10μF	25V
C510, C910	5054740000	Dip Myca	10pF	50V
C511, C512	5260213150	Elec.	22μF	25V
C513, C913	5263106020	Polyst.	180pF	100V
	VARIABLE RESISTORS			
R558, R958	5280021900	Semi-fixed	100kΩ(B)	
	MISCELLANEOUS			
	5330010100	Jack, Headphone		
	5330009400	Jack, Mic		

Parts marked with *require longer delivery time.

[U] : U.S.A. [C] : CANADA [GE] : GENERAL EXPORT [A] : AUSTRALIA
[E] : EUROPE [UK] : U.K. [L] : LIMITED AREA [J] : JAPAN

OPERATION PCB A'ssy

REF. NO.	PARTS NO.	DESCRIPTION
	*5200135900	PCB Assy
	*5210135901	PCB
D810, D811	5225007100	LED, GL-9NG2 (GRN)
D812~D815	5225007900	LED, GL-9NR2 (RED)
S810~S818	6051083000	Switch, Tact

VOLUME PCB A'ssy

REF. NO.	PARTS NO.	DESCRIPTION
	*5200135800	PCB Assy
	*5210135800	PCB
	VARIABLE RESISTORS	
VR01~VR03	5282702200	Semi-fixed 50kΩ(A) x 2

COUNTER PCB A'ssy

REF. NO.	PARTS NO.	DESCRIPTION
	*5200136000	PCB Assy
	*5210136000	PCB
U800	5225013000	LED, Indicator; GL-3E508A
D816, D817	5225013200	LED, GL-9PR24 (RED)
S819~S824	5138011000	Switch, Tact; AKC-8S

DUPLI. SINC. PCB A'ssy

REF. NO.	PARTS NO.	DESCRIPTION
	*5200142300	PCB Assy
	*5210142300	PCB
Q820, Q821	5232007200	FET, 2SK-364BL
R820, R821	5240176600	Carbon Resistor 3.3MΩ ±5% ¼W
R822, R823	5240033020	Carbon Resistor 100KΩ ±5% ¼W
C820, C821	5263167923	Metarized Cap. 0.1μF ±5% 50V

BUFFER AMPL. PCB A'ssy

REF. NO.	PARTS NO.	DESCRIPTION		
	*5200159700	PCB Assy		
	*5210159700	PCB		
	TRANSISTORS			
Q1, Q2	5042383000	2SC536F		
	CARBON RESISTORS			
R1, R2	5240030020	5.6kΩ	5%	¼W
R3, R4	5240025820	100Ω	5%	¼W
R5, R6	5240033020	100kΩ	5%	¼W
	CAPACITORS			
C1, C2	5266027400	Dip. Tantal	1μF	35V

FUSE PCB A'ssy (PC Board omitted)

REF. NO.	PARTS NO.	DESCRIPTION
	*5200140401	PCB Assy [E, UK, A]
	*5200140501	PCB Assy [U, C]
	*5210140401	PCB [E, UK, A]
	*5210140501	PCB [U, C]
F1, F2	⚠ 5041138000	Mini Fuse, 500mA 250V [E,UK,A]
	⚠ 5307019900	T Type Fuse, 0.5A 250V [U, C]
F3	⚠ 5041140000	Mini Fuse, 1A 250V [E, UK, A]
	⚠ 5307020400	T Type Fuse, 1A 250V [U, C]
F4	⚠ 5142193000	Mini Fuse, 5A 250V [E, UK, A]
	⚠ 5307021700	T Type Fuse, 5A 250V [U, C]
F5	⚠ 5142192000	Mini Fuse, 4A 250V [E, UK, A]
	⚠ 5307021600	T Type Fuse, 4A 250V [U, C]
	5142087000	Fuse Holder [E, UK, A]
	5041237000	Fuse Holder [U, C]

TENSION SENSOR PCB A'ssy (PC Board omitted)

REF. NO.	PARTS NO.	DESCRIPTION
	*5200067402	PCB Assy
	*5210067402	PCB
	RESISTORS	
	All resistors are rated ±5% tolerance, ¼W and of carbon type unless otherwise noted.	
R810, R811	5241426602	5.1kΩ, Metal Film
R812	5183080000	820Ω
R813	5183099000	5.1kΩ
	MISCELLANEOUS	
U810	6048807000	Interrupter, ON1102

Parts marked with *require longer delivery time.

[U] : U.S.A. [C] : CANADA [GE] : GENERAL EXPORT [A] : AUSTRALIA
[E] : EUROPE [UK] : U.K. [L] : LIMITED AREA [J] : JAPAN

SPEED SWITCH PCB A'ssy (PC Board omitted)

REF. NO.	PARTS NO.	DESCRIPTION
	*5200136200	PCB Assy
	*5210136200	PCB
S801	5300036100	Push Switch, 4-4
S802	5300036200	Push Switch, 2-1N
P801	5122454000	Connector Plug, 3P (RED)
P802	5122147000	Connector Plug, 4P (WHT)

AUTO REVERSE PCB A'ssy (PC Board omitted)

REF. NO.	PARTS NO.	DESCRIPTION
	*5200136300	PCB Assy
	*5210136300	PCB
S803	5301204600	Switch, Rotary 2-3
R801	5282250700	Variable Resistor 5kΩ (B)
P803	5122145000	Connector Plug, 2P (WHT)

VOLT SELC. PCB A'ssy (PC Board omitted)

REF. NO.	PARTS NO.	DESCRIPTION
	*5200140600	PCB A'ssy [GE, L]
	*5210140600	PCB
S402	⚠ 5302101700	Voltage Selector Switch
F401	⚠ 5041155000	Mini Fuse, 2A 250V
	5142087000	Fuse Holder

BIAS VR PCB A'ssy (PC Board omitted)

REF. NO.	PARTS NO.	DESCRIPTION
	*5200136500	PCB Assy
	*5210136500	PCB
VR04	5282250500	Variable Resistor 5kΩ(B)

DBX SWITCH PCB A'ssy (PC Board omitted)

REF. NO.	PARTS NO.	DESCRIPTION
	*5200136700	PCB Assy
	*5210136700	PCB
S306	5300036000	Push Switch, 6-6

DBX LAMP PCB A'ssy (PC Board omitted)

REF. NO.	PARTS NO.	DESCRIPTION
	*5200136600	PCB Assy
	*5210136600	PCB
DS02	5310006900	Lamp

POWER SWITCH PCB A'ssy (PC Board omitted)

REF. NO.	PARTS NO.	DESCRIPTION
	*5200113110	PCB Assy [U]
	*5200113120	PCB Assy [C]
	*5200113100	PCB Assy [J, GE, L]
	*5200141900	PCB Assy [E, UK, A]
	*5260073201	PCB [U, C, J, GE, L]
	*5210104801	PCB [E, UK, A]
S1	⚠ 5300030800	Push Switch, Power
Z1	⚠ 5052910000	Spark Killer 0.033μF+120Ω/125V [U]
	⚠ 5292002600	Spark Killer 0.033μF+120Ω/125V [C]
	⚠ 5052907000	Spark Killer 0.01μF+300Ω/300V [J,GE,L]
	⚠ 5267702500	Spark Killer 0.0047μF/250V [E, UK, A]
C90	5267702600	Spark Killer 0.047μF/250V [E, UK]

IN/OUTPUT PCB A'ssy (PC Board omitted)

REF. NO.	PARTS NO.	DESCRIPTION
	*5200136400	PCB Assy
	*5210136400	PCB
	5330508500	Pin Jack, 4P

ROLLER SENSOR PCB A'ssy (PC Board omitted)

REF. NO.	PARTS NO.	DESCRIPTION
	*5200136100	PCB Assy
	*5210136100	PCB
U801, U802	5228009600	Photo Interrupter, SP1-208

TRANSISTOR PCB A'ssy (PC Board omitted)

REF. NO.	PARTS NO.	DESCRIPTION
	*5200073100	PCB Assy
	*5210073100	PCB
Q801	⚠ 5145171000	Transistor 2SD718O

Parts marked with *require longer delivery time.

[U] : U.S.A. [C] : CANADA [GE] : GENERAL EXPORT [A] : AUSTRALIA
[E] : EUROPE [UK] : U.K. [L] : LIMITED AREA [J] : JAPAN

X-2000R

TEAC®

ティアック株式会社

	本社 営業部	180・東京都武蔵野市中町3－7－3	電話 武蔵野 (0422) 53-1111(代)
製品についてのお問合わせ サービスに関するお問合わせ	札幌営業所	064・札幌市中央区南7条西2－2くぼたビル	電話 札幌 (011)521-4101(代)
	仙台営業所	980・仙台市1番町2－5－5中央ビル	電話 仙台 (0222) 27-1501(代)
	東京営業所	100・東京都千代田区永田町2－10－7星ガ岡会館	電話 東京 (03)592-1831(代)
	三鷹出張所	180・東京都武蔵野市中町3－7－3	電話 武蔵野 (0422) 55-1611(代)
	千葉出張所	280・千葉市松波1－11－3石橋松波ビル	電話 千葉 (0472) 55-1281(代)
	横浜営業所	221・横浜市神奈川区沢渡1－1高島台第一ビル	電話 横浜 (045)312-3271(代)
	名古屋営業所	464・名古屋市千種区東山通り3－2－3	電話 名古屋 (052)782-4581(代)
	静岡出張所	420・静岡市中島大割286－1	電話 静岡 (0542) 81-6561(代)
	大阪営業所	564・大阪府吹田市垂水町3－34－10	電話 大阪 (06)384-5201(代)
	京都出張所	600・京都市下京区大宮通四条下ル四条大宮町21番地三虎ビル	電話 京都 (075)842-0751(代)
	岡山出張所	700・岡山市青江5－12番1号	電話 岡山 (0862) 25-8601(代)
	広島営業所	733・広島市中区中島町10－24	電話 広島 (082)243-3581(代)
	福岡営業所	812・福岡市博多区博多駅東2－17－5モリメンビル	電話 福岡 (092)431-5781(代)
サービスに関するお問合わせ	本社サービス1課	180・東京都武蔵野市中町3－7－3	電話 武蔵野 (0422) 53-3241(代)
	沖縄サービスセンター	901-22・沖縄県宜野湾市字喜友名229	電話 沖縄 (09889) 2-2021(代)
技術的なお問合わせ	テープデッキ相談室	180・東京都武蔵野市中町3－7－3	電話 武蔵野 (0422) 53-9211(代)

TEAC CORPORATION	3-7-3 NAKA-CHO MUSASHINO TOKYO PHONE (0422) 53-1111
TEAC CORPORATION OF AMERICA	7733 TELEGRAPH ROAD MONTEBELLO CALIFORNIA 90640 PHONE (213) 726-0303
TEAC CANADA LTD.	3610 NASHUA DRIVE UNIT 1 & 2 MISSISSAUGA ONTARIO L4V 1L2 PHONE 416-673-3303
TEAC AUSTRALIA PTY., LTD.	115 WHITEMAN STREET SOUTH MELBOURNE VICTORIA 3205 PHONE 699-6000

PRINTED IN JAPAN 0684 AO 1.91 D-4603A

SCHEMATIC DIAGRAMS

X-2000R

INSTRUCTIONS FOR SERVICE PERSONNEL

BEFORE RETURNING APPLIANCE TO THE CUSTOMER, MAKE LEAKAGE-CURRENT OR RESISTANCE MEASUREMENTS TO DETERMINE THAT EXPOSED PARTS ARE ACCEPTABLY INSULATED FROM THE SUPPLY CIRCUIT.

NOTES

1. Schematic diagram of the amplifier section shown for left channel except for some of the components.
2. All resistors are ¼ watt, ±5%, unless marked otherwise. Resistor values are in ohms (k = 1,000 ohms).
3. All capacitor values are in microfarads (p = picofarads).
4. ⚠ Parts marked with this sign are safety critical components. They must always be replaced with identical components-refer to the TEAC parts list and ensure exact replacement.
5. Voltage and level values are for reference only. 0dB = 0.775V Indicated values are those existing when the meter indicates 0VU.
6. [ ] : front panel indictation
7. [ ] : rear panel indication
8. ——— +B power supply circuit.
9. - - - - - −B power supply circuit.

注.

1. アンプ回路はLchのみが示されています.
2. 抵抗の単位はΩ(k=kΩ, M=MΩ).
   特に指定のない限り, 1/4W型, 偏差は±5%.
3. コンデンサの単位はμF(p=pF).
   (BP):バイポーラ・コンデンサ
   (CE):セラミック・コンデンサ
   特に指定のないコンデンサは, 偏差±5%のマイラ・コンデンサ.
4. 電圧値および信号レベルは参考値です.
   0dB=0.775V
5. ⚠マークのある部品は安全重要部品です.
   交換するときは必ずティアック指定の部品を使用してください.
6. [ ] : フロント・パネル上の表示
7. [ ] : リア・パネル上の表示
8. ——— : +B電源回路
9. - - - - - : −B電源回路

TEAC®

2nd Issue; June, 1984

TEAC WIRING DIAGRAM X-2000R

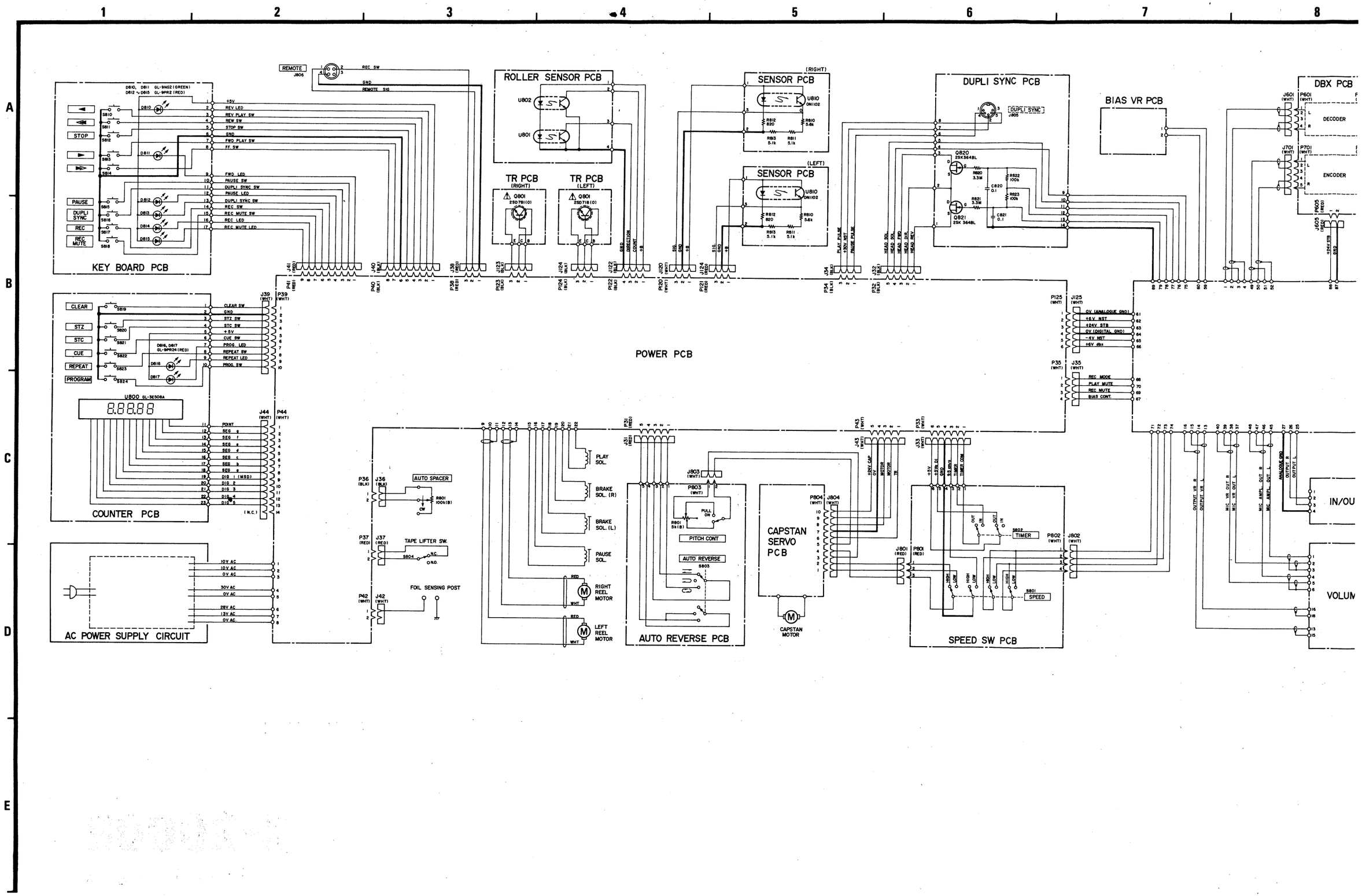

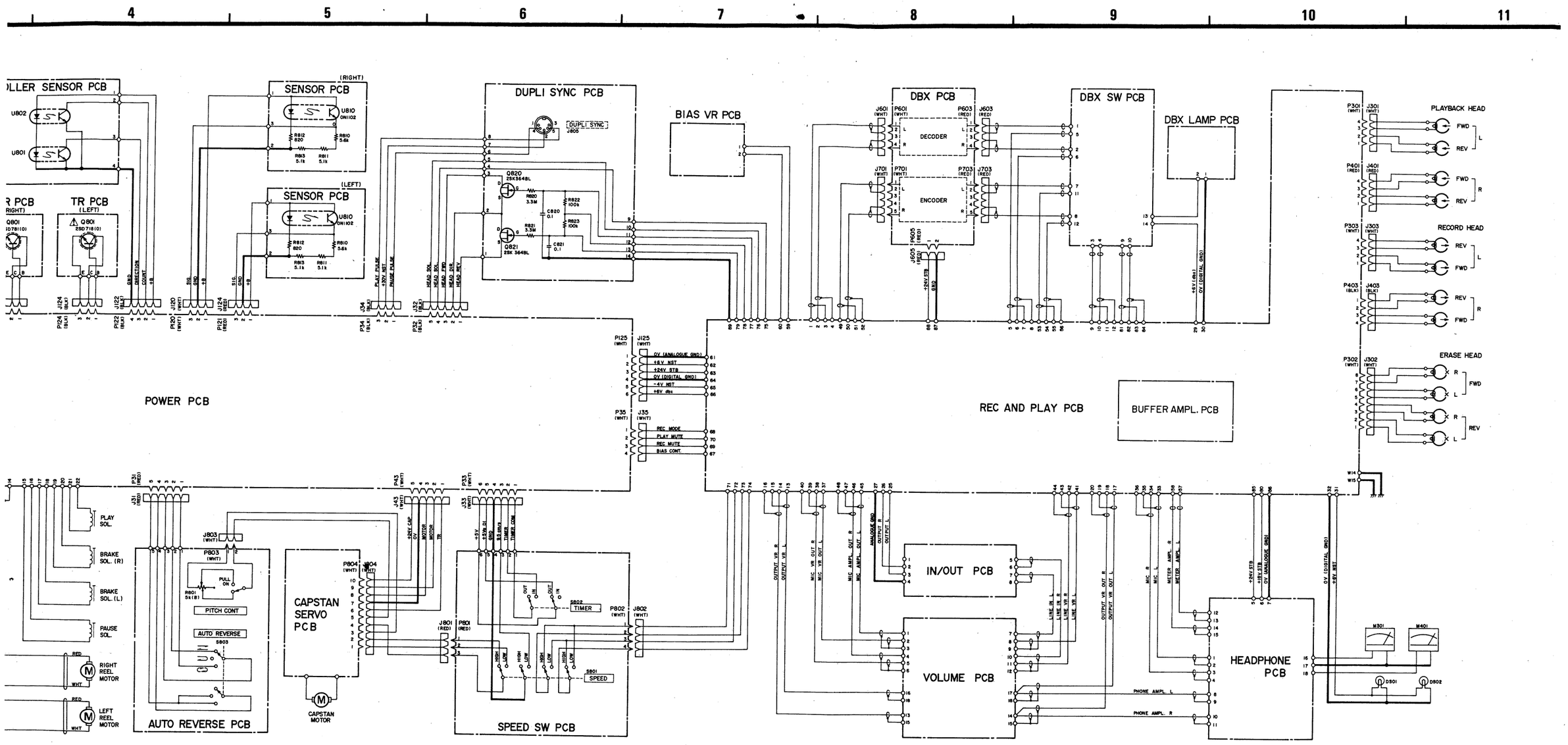

X-2000R

Stereo Tape Deck

2nd Issue; June, 1984

TEAC SCHEMATIC DIAGRAM (REC/PLAY) X-2000R

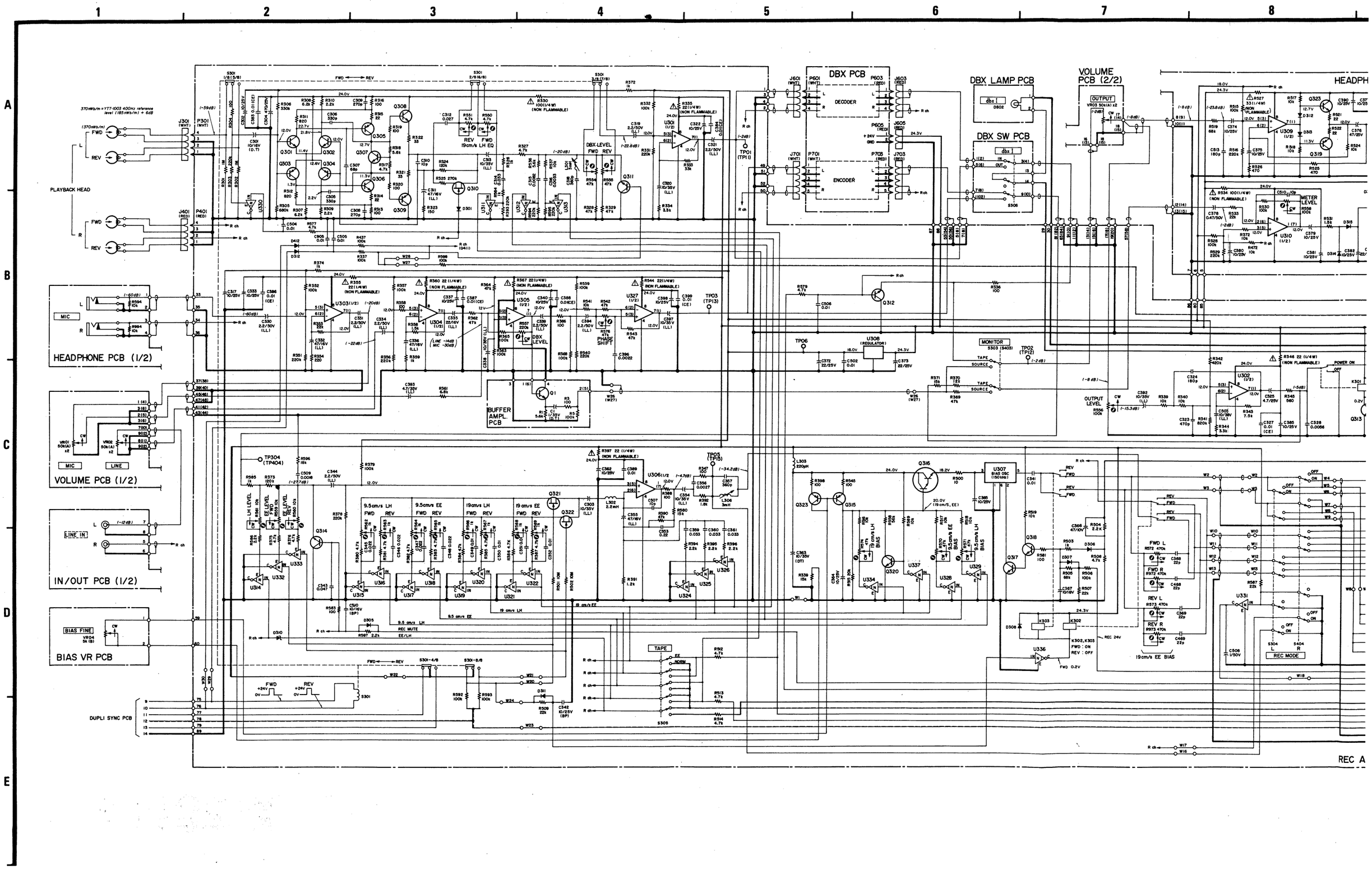

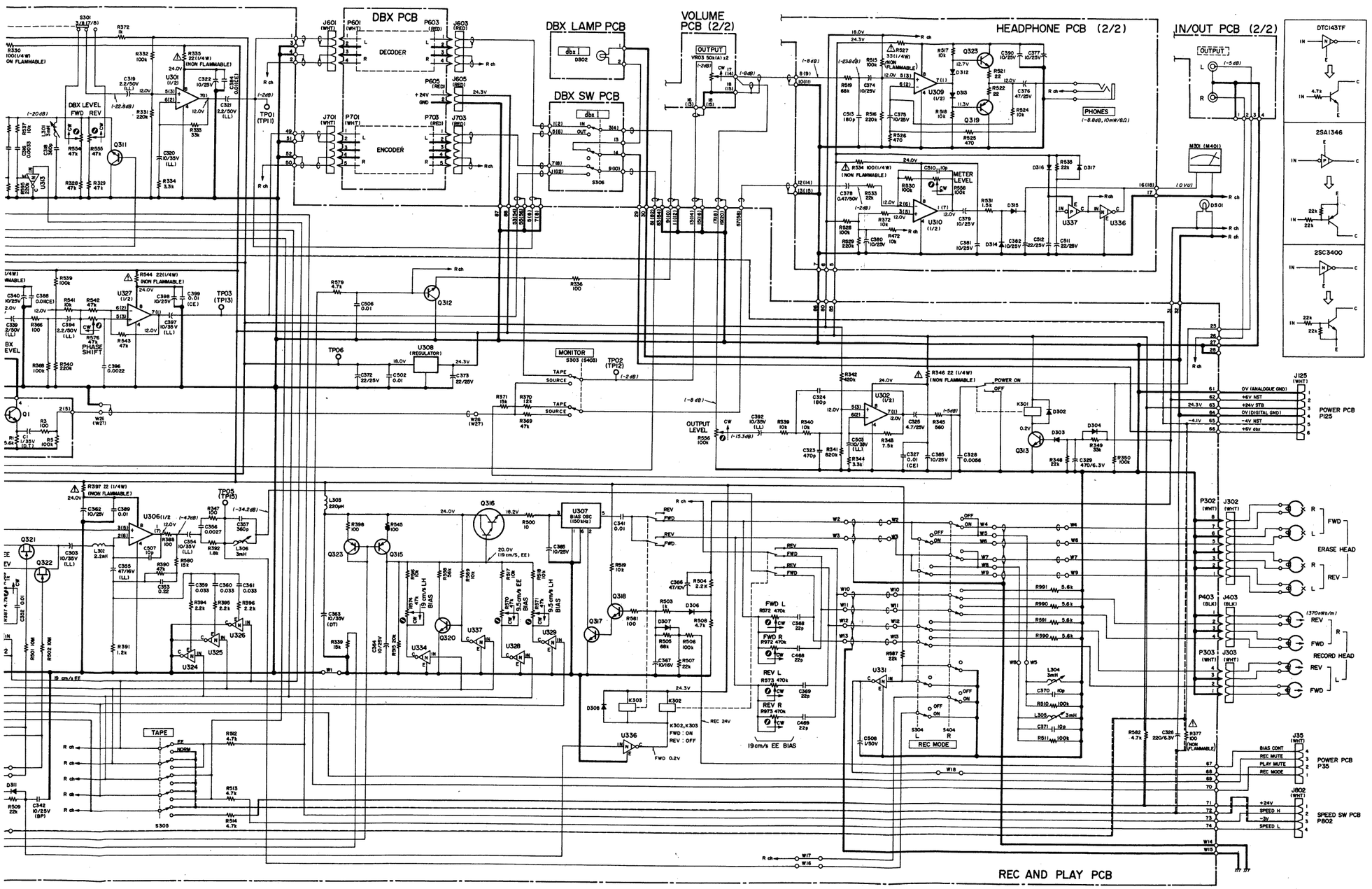

REC AND PLAY PCB ( ): R ch

U301 ∿ U306	LM833N
U307	BIAS OSC (50kHz)
U308	NJM78M18A
U309, U310	Not used
U311 (U411)	DTC143TF
U312 (U412)	
U313 (U413)	
U314 (U414)	
U315 (U415)	
U316 (U416)	
U317 (U417)	
U318 (U418)	
U319 (U419)	
U320 (U420)	
U321 (U421)	
U322 (U422)	
U323	Not used
U324 (U424)	DTC143TF
U325 (U425)	
U326 (U426)	
U327	LM833N
U328, U329	DTC143TF
U330 (U430)	
U331	2SC3400
U332 (U432)	DTC143TF
U333 (U433)	
U334	Not used
U335	
U336, U337	DTC143TF
Q301 (Q401)	2SC945L-K
Q302 (Q402)	
Q303 (Q403)	2SA733K
Q304 (Q404)	
Q305 (Q405)	2SA999F
Q306 (Q406)	2SC2320F
Q307 (Q407)	
Q308 (Q408)	
Q309 (Q409)	2SA999F
Q310 (Q410)	2SK364BL
Q311 (Q411)	2SD655E
Q312 (Q412)	
Q313	2SC2320F
Q314 (Q414)	2SD655E
Q315	2SA999F
Q316	2SD1140
Q317, Q318	2SC2320F
Q319	(Not used)
Q320	2SC2320F
Q321 (Q421)	2SK364BL
Q322 (Q422)	
Q323	2SA999F
D301 (D401)	1SI33 T-77
D302	DSI35D
D303, D304	1SI33 T-77
D305	1SI33 T-77
D306, D307	1SI33 T-77
D308	DSI35D
D310	RD3.6EB2
D311	1SS133 T-77
D312, D412	DSI35D

BUFFER AMPL. PCB ( ): R ch

Q1 (Q2)	2SC536F

HEADPHONE PCB ( ): R ch

U309, U310	M5218P
U336 (U436)	2SC3400
U337	2SA1346
Q319 (Q419)	2SA937LNR
Q323 (Q423)	2SC2021LNR
D312 (D412)	1SS133 T-77
D313 (D413)	
D314 (D414)	1K60
D315 (D415)	
D316, D317	1SS133 T-77

SEMI-FIXED RESISTOR

VIEW FROM FOIL SIDE OF REC AND PLAY PCB

X-2000R

Stereo Tape Deck

2nd Issue; June, 1984

TEAC SCHEMATIC DIAGRAM (POWER) X-2000R

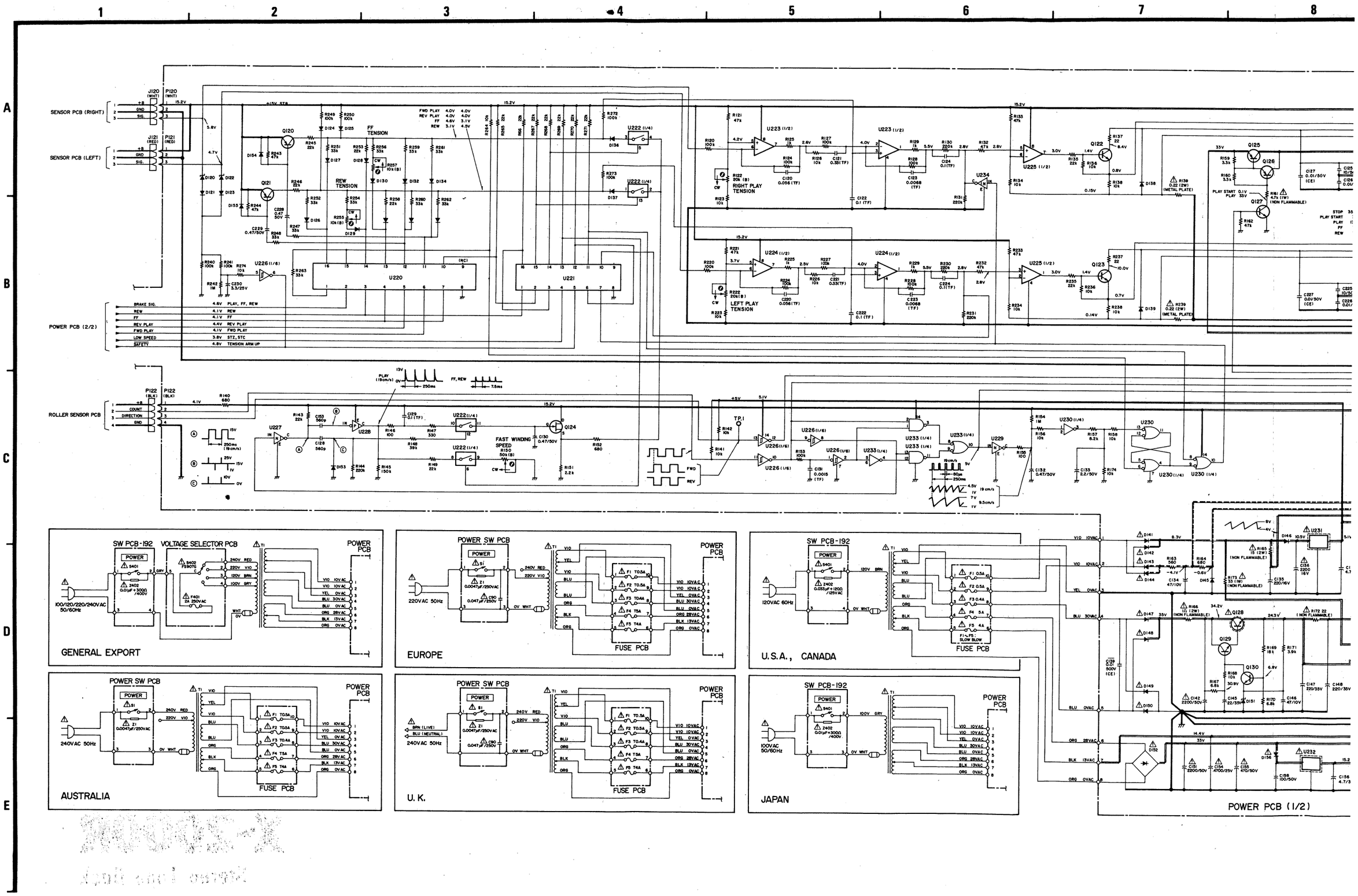

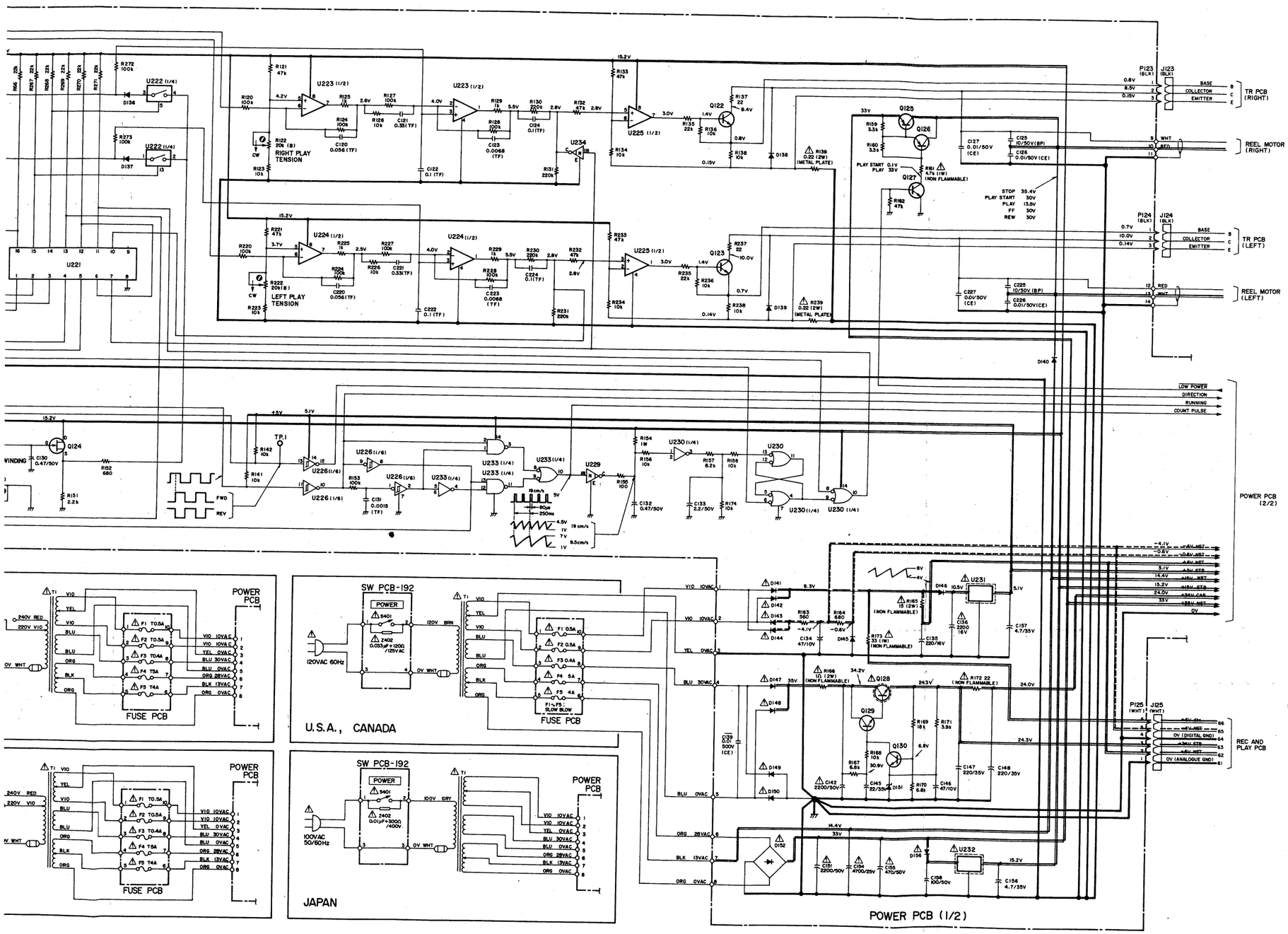

POWER PCB (1/2)

U220, U221	BA6251
U222	MC14066B or HD14066B
U223~U225	LA6358
U226	MC14558BCP or HD14584B
U227	2SC3400
U228	2SA1346
U229	2SC3400
U230	MC14011BCP or HD14011BP
U231	L78N05
U232	L78N15
U233	MC14011BCP or HD14011BP
Q120, Q121	2SA733P
Q122, Q123	2SC2320 (F)
Q124	2SK68 (A)
Q125	2SB507 (E)
Q126	2SA1015 (GR)
Q127	2SC945 (K)
Q128	2SD313E
Q129	2SC1318
Q130	2SC945 (K)
D120	RD9.1EB2
D121	1SS133T
D122	RD9.1EB2
D123~D137	1SS133T
D138~D144	DSI35D
D145	1SS133T
D146~D150	DSI35D
D151	RD6.2EB2
D152	M4C-51
D153	DSI35D
D156	DSI35D

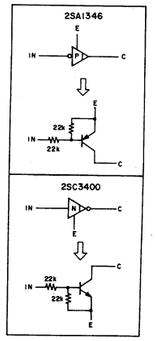

X-2000R

Stereo Tape Deck

2nd Issue; June, 1984

TEAC SCHEMATIC DIAGRAM (POWER) X-2000R

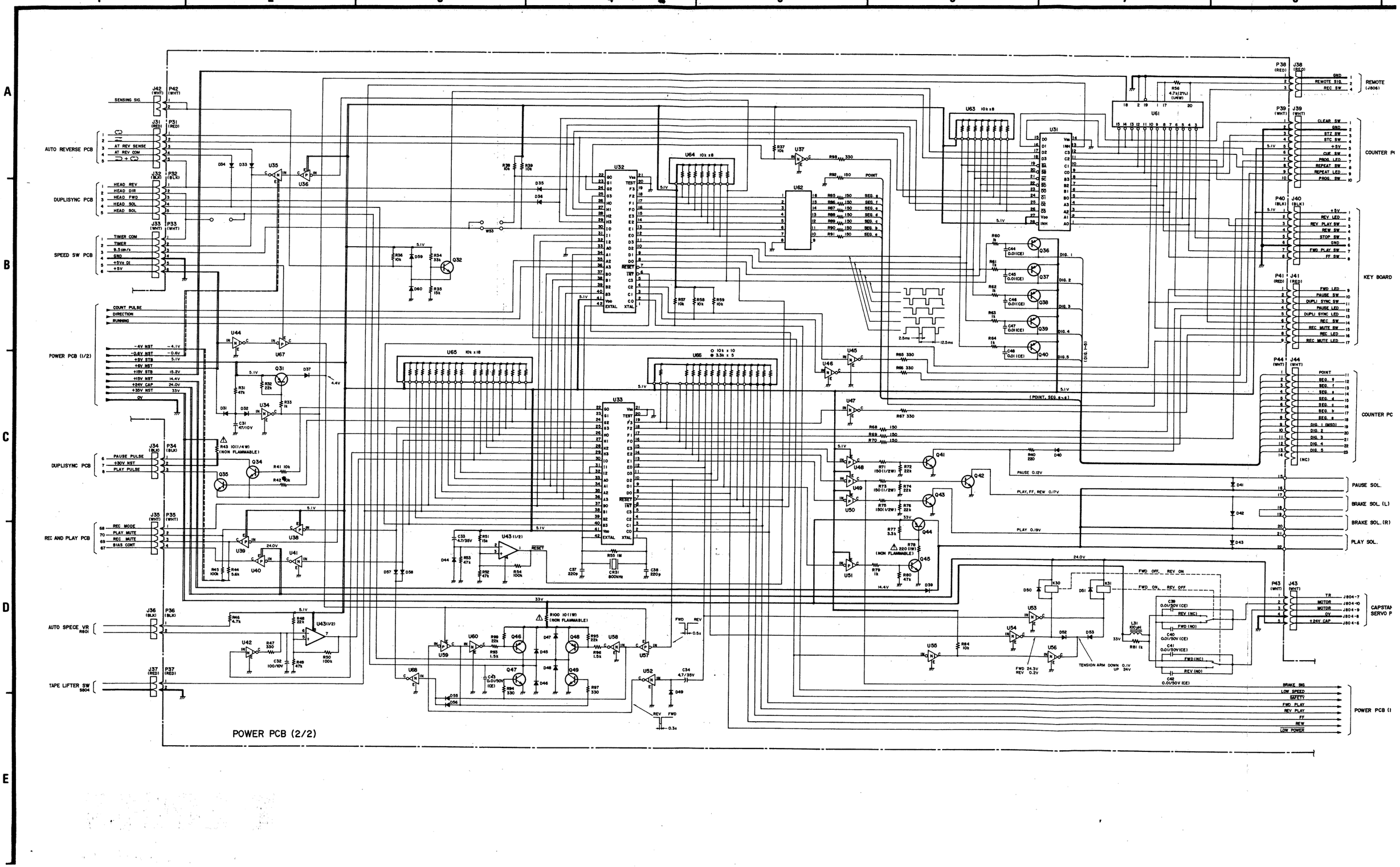

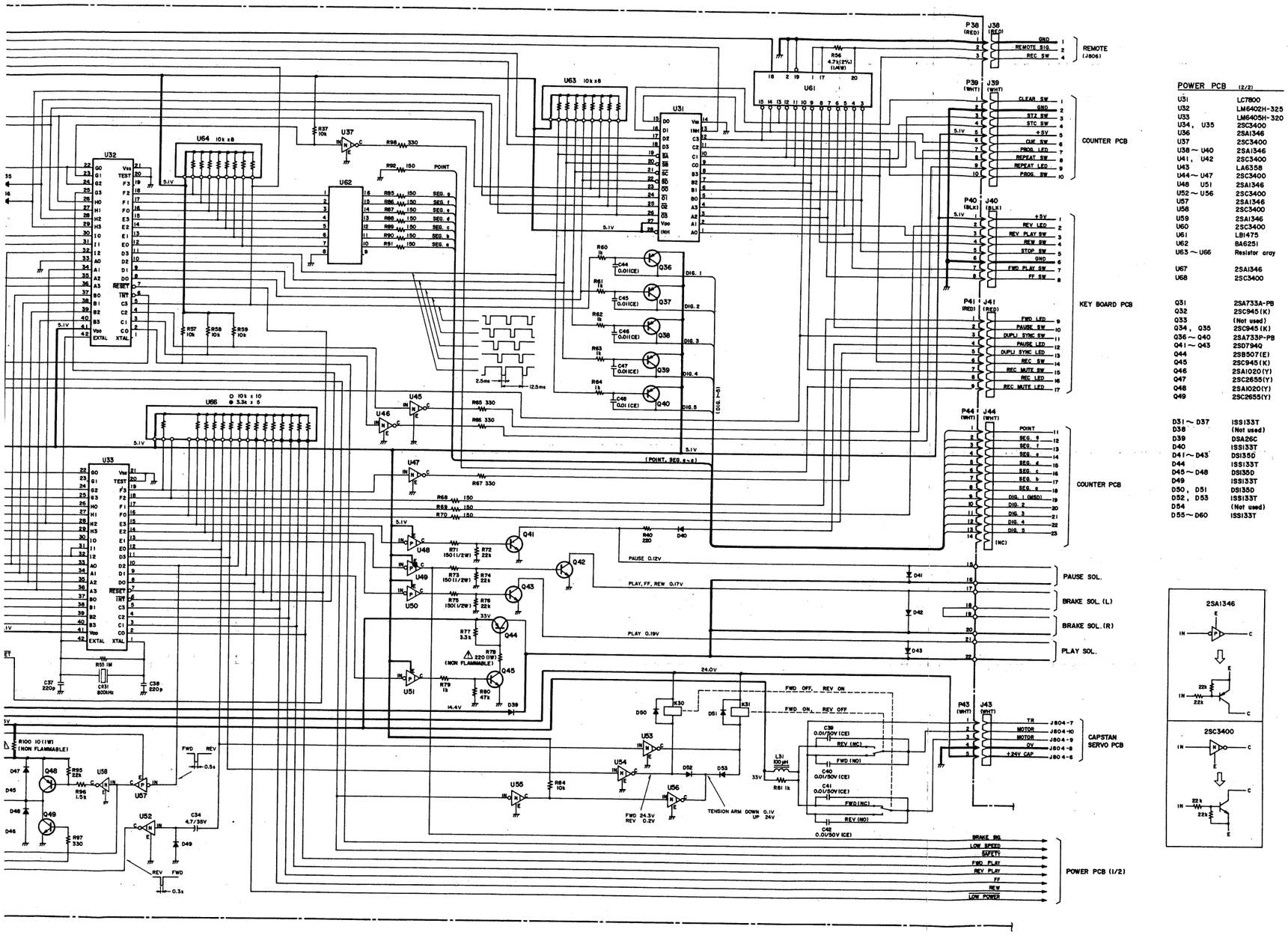

POWER PCB (2/2)	
U31	LC7800
U32	LM6402H-325
U33	LM6405H-320
U34, U35	2SC3400
U36	2SA1346
U37	2SC3400
U38 ~ U40	2SA1346
U41, U42	2SC3400
U43	LA6358
U44 ~ U47	2SC3400
U48 U51	2SA1346
U52 ~ U56	2SC3400
U57	2SA1346
U58	2SC3400
U59	2SA1346
U60	2SC3400
U61	LB1475
U62	BA6251
U63 ~ U66	Resistor array
U67	2SA1346
U68	2SC3400
Q31	2SA733A-PB
Q32	2SC945(K)
Q33	(Not used)
Q34, Q35	2SC945(K)
Q36 ~ Q40	2SA733P-PB
Q41 ~ Q43	2SD794Q
Q44	2SB507(E)
Q45	2SC945(K)
Q46	2SA1020(Y)
Q47	2SC2655(Y)
Q48	2SA1020(Y)
Q49	2SC2655(Y)
D31 ~ D37	1SS133T
D38	(Not used)
D39	DSA26C
D40	1SS133T
D41 ~ D43	DSI35D
D44	1SS133T
D45 ~ D48	DSI35D
D49	1SS133T
D50, D51	DSI35D
D52, D53	1SS133T
D54	(Not used)
D55 ~ D60	1SS133T

X-2000R

Stereo Tape Deck

2nd Issue; June, 1984

TEAC SCHEMATIC DIAGRAM (DBX) X-2000R

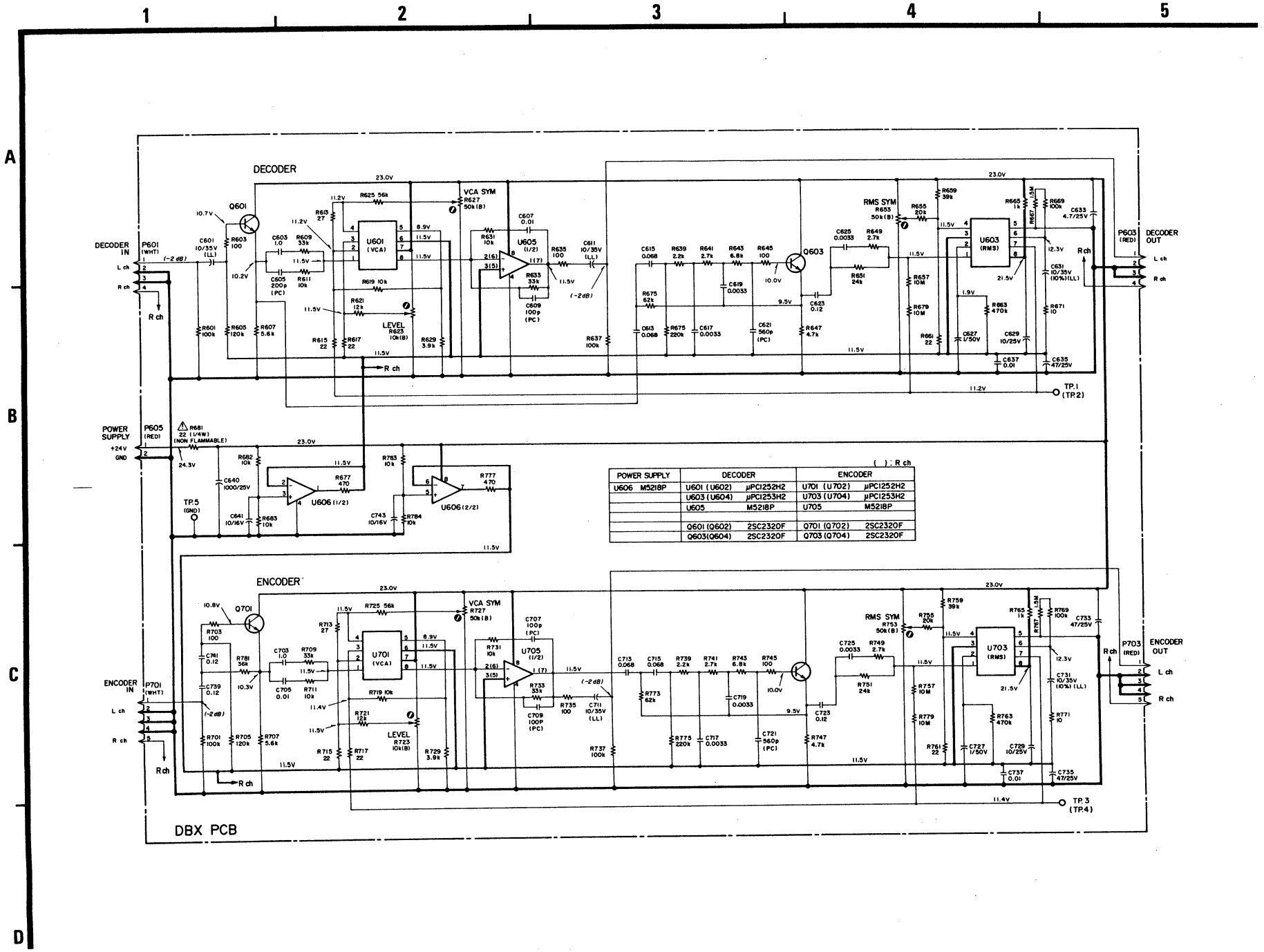

( ) : R ch

POWER SUPPLY	DECODER		ENCODER	
U606 M5218P	U601 (U602)	μPC1252H2	U701 (U702)	μPC1252H2
	U603 (U604)	μPC1253H2	U703 (U704)	μPC1253H2
	U605	M5218P	U705	M5218P
	Q601 (Q602)	2SC2320F	Q701 (Q702)	2SC2320F
	Q603 (Q604)	2SC2320F	Q703 (Q704)	2SC2320F